Technical Service Manual

R-22 Split Systems

10 SEER Standard Efficiency

R-22 50 & 60 Hz

Single Split	Indoor Unit	Outdoor Unit
Cooling only	2MCW05-G	2TTK05-G
Heat pump	2MWW05-G	2TWK05-G

June 2010

Warnings, Cautions and Notices

Warnings and Cautions. Notice that warnings and cautions appear at appropriate intervals throughout this manual. Warnings are provided to alert installing contractors to potential hazards that could result in personal injury or death, while cautions are designed to alert personnel to conditions that could result in equipment damage.

Your personal safety and the proper operation of this machine depend upon the strict observance of these precautions.

Attention : Warnings and Cautions appear at appropriate sections throughout this literature. Read these carefully.

⚠**WARNING** : Indicates a potentially hazardous situation which, if not avoided, could result in death or serious injury.

⚠**CAUTION** : Indicates a potentially hazardous situation which, if not avoided, could result in minor or moderate injury. It may also be used to alert against unsafe practices.

NOTICE: Indicates a situation that could result in equipment or property-damage only accidents.

⚠**WARNING**

Ground Required!

Follow proper local electrical code on requirements for grounding. Failure to follow code could result in death or serious injury.

⚠**WARNING**

This information is intended for use by individuals possessing adequate backgrounds of electrical and mechanical experience. Any attempt to repair a central air conditioning product could result in death, personal injury or property damage. The manufacturer or seller cannot be responsible for the interpretation of this information, nor can it assume any liability in connection with its use.

Important!

Environmental Concerns

Scientific research has shown that certain man-made chemicals can affect the earth's naturally occurring stratospheric ozone layer when released to the atmosphere. In particular, several of the identified chemicals that may affect the ozone layer are refrigerants that contain Chlorine, Fluorine and Carbon (CFCs) and those containing Hydrogen, Chlorine, Fluorine and Carbon (HCFCs). Not all refrigerants containing these compounds have the same potential impact to the environment. Trane advocates the responsible handling of all refrigerants—including industry replacements for CFCs such as HCFCs and HFCs.

Responsible Refrigerant Practices

Trane believes that responsible refrigerant practices are important to the environment, our customers, and the air conditioning industry. All technicians who handle refrigerants must be certified. The Federal Clean Air Act (Section 608) sets forth the requirements for handling, reclaiming, recovering and recycling of certain refrigerants and the equipment that is used in these service procedures. In addition, some states or municipalities may have additional requirements that must also be adhered to for responsible management of refrigerants. Know the applicable laws and follow them.

© 2010 Trane All rights reserved

Table of Contents

Model Specifications 4
Piping Specifications 16
Capacity Variation Ratio According to Pipe Length 18
System Diagram 20
Dimensions 21
- Indoor Units 21
- Outdoor Units 22

Electrical Characteristics 23
Capacity Tables 24
Wiring Diagrams 35
Air Velocity Distribution 45
Sound Level 46
Operating Functions 47
- Operation of remote controller 47
  - Temperature parameters 47
  - Fundamental functions 47
  - Other control 49
  - Common protection function in each mode 51

Disassembly Procedures 53
- Indoor Units 53
- Outdoor Units 56

Troubleshooting 59
- General Section 59
- Malfunction Display Section 64

Model Specifications 60Hz Heat pump models

Model		2MWW0509G1 2TWK0509G1		2MWW0512G1 2TWK0512G1	
Function		COOLING	HEATING	COOLING	HEATING
Rated Voltage		220V		220V	
Frequency(Hz)		60		60	
Nominal Capacity (Btu/h)		9000	9000	12000	12000
Net Capacity (Btu/h)		8900	9200	12000	12500
Power Input (W)		840	890	1150	1200
Nominal Current (A)		5.59	5.94	8.4	8.4
SEER/HSPF		10	7	10	7
Air Flow Volume (m^3/h) (H/M/L)**		500/440/400/360		630/530/430/330	
Dehumidifying Volume (l/h)		0.8		1.4	
EER / C.O.P (W/W)		3.21/3.05		3.05/3.05	
Indoor unit	**Model of Indoor Unit**	**2MWW0509G1**		**2MWW0512G1**	
	Fan Motor Speed (r/min) (SH/H/M/L)	1350/1250/1100/950	1350/1250/1100/1000	1260/1070/900/730	1260/1070/900/730
	Output of Fan Motor (w)	10		20	
	Fan Motor Capacitor (uF)	1		1	
	Fan Motor RLA(A)	0.17		0.254	
	Fan Type-Piece	Cross flow fan – 1		Cross flow fan – 1	
	Diameter-Length (mm)	φ85 X 596		φ92 X 645	
	Evaporator	Aluminum fin-copper tube		Aluminum fin-copper tube	
	Pipe Diameter (mm)	Φ7		Φ7	
	Row-Fin Gap(mm)	2-1.5		2-1.4	
	Coil length (l) x height (H) x coil width (L)	581X25.4X264		645X25.4X267	
	Swing Motor Model	MP24AA		MP24AA	
	Output of Swing Motor (W)	1.5		1.5	
	Fuse (A)	PCB 3.15A Transformer 0.2 A		PCB 3.15A Transformer 0.2 A	
	Sound Pressure Level dB (A) (SH/H/M/L)	40/37/33/28	40/37/33/28	4138/34/29	4138/34/29
	Sound Power Level dB (A) (SH/H/M/L)***	50/47/43/38	50/47/43/38	5148/44/39	5148/44/39
	Dimension (W/H/D) (mm)	790×265×170		845×275×180	
	Dimension of Package (L/W/H) (mm)	870×248×355		915×355×255	
	Net Weight /Gross Weight (kg)	9/12		10/13	
	Room Temp. sensor	15K		15K	
	Pipe Temp. sensor	20K		20K	
Outdoor unit	**Model of Outdoor Unit**	**2TWK0509G1**		**2TWK0512G1**	
	Compressor Manufacturer/trademark	GREE		GREE	
	Compressor Model	QX-B14rA030		QX-C184rE030g	
	Compressor Type	Rotary		Rotary	
	L.R.A. (A)	25		38	
	Compressor RLA(A)	3.9		5.1	
	Compressor Power Input(W)	875		1100	
	Overload Protector	B180-155-141E		/	
	Throttling Method	Capillary		Capillary	
	Starting Method	Capacitor		Capacitor	
	Working Temp Range (℃)	18℃≤T≤45℃	(7)℃≤T≤24℃	18℃≤T≤45℃	(7)℃≤T≤24℃
	Condenser	Aluminum fin-copper tube		Aluminum fin-copper tube	
	Pipe Diameter (mm)	Φ7		Φ7	
	Rows-Fin Gap(mm)	2-1.4		2-1.4	
	Coil length (l) x height (H) x coil width (L)	781X495X25.4		731X495X25.4	
	Fan Motor Speed (rpm)	800		850	
	Output of Fan Motor (W)	30		30	
	Fan Motor RLA(A)	0.37		0.35	
	Fan Motor Capacitor (uF)	2.5		2	
	Air Flow Volume of Outdoor Unit m^3/h	1600		1700	
	Fan Type-Piece	Axial fan –1		Axial fan –1	
	Fan Diameter (mm)	400		400	
	Defrosting Method	Auto defrost		Auto defrost	
	Climate Type	T1		T1	
	Isolation	I		I	
	Moisture Protection	IP24		IP24	
	Permissible Excessive Operating Pressure for the Discharge Side(MPa)	2.5		2.5	
	Permissible Excessive Operating Pressure for the Suction Side(MPa)	0.6		0.6	
	Sound Pressure Level dB (A) (H/M/L)	≤50		≤51	
	Sound Power Level dB (A) (H/M/L)	≤60		≤61	
	Dimension (W/H/D) (mm)	848X540X320		848X540X320	
	Dimension of Package (L/W/H)(mm)	878X580X360		878X580X360	
	Net Weight /Gross Weight (kg)	32.5/35.5		35/39	
	Refrigerant Charge (kg)	R-22 / 1.02		R-22 / 1.1	

Model		2MWW0512G9 2TWK0512G9		2MWW0518G1 2TWK0518G1	
Function		COOLING	HEATING	COOLING	HEATING
Rated Voltage		115V		220V	
Frequency(Hz)		60		60	
Nominal Capacity (Btu/h)		12000	12000	18000	18000
Net Capacity (Btu/h)		11800	12800	18000	18700
Power Input (W)		1240	1340	1660	1860
Nominal Current (A)		13.31	13.31	10.3	10.3
SEER/HSPF		10	7	10	7
Air Flow Volume (m^3/h) (H/M/L)**		630/530/430/330		850/780/650/550	
Dehumidifying Volume (l/h)		1.4		1.8	
EER / C.O.P (W/W)		2.8/2.8		3.18/2.95	
Indoor unit	**Model of Indoor Unit**	**2MWW0512G9**		**2MWW0518G1**	
	Fan Motor Speed (r/min) (SH/H/M/L)	1260/1070/900/730	1100/1050/980/920	1350/1200/1050/900	1350/1200/1050/900
	Output of Fan Motor (w)	20		20	
	Fan Motor Capacitor (uF)	4		1.5	
	Fan Motor RLA(A)	0.4		0.32	
	Fan Type-Piece	Cross flow fan – 1		Cross flow fan – 1	
	Diameter-Length (mm)	φ92 X 645		φ98 X 710	
	Evaporator	Aluminum fin-copper tube		Aluminum fin-copper tube	
	Pipe Diameter (mm)	Φ7		Φ7	
	Row-Fin Gap(mm)	2-1.4		2-1.4	
	Coil length (l) x height (H) x coil width (L)	645X25.4X267		715X25.4X304.8	
	Swing Motor Model	MP24AA		MP28VB	
	Output of Swing Motor (W)	1.5		2	
	Fuse (A)	PCB 3.15A Transformer 0.2 A		PCB 3.15A Transformer 0.2 A	
	Sound Pressure Level dB (A) (SH/H/M/L)	42/39/36/30	42/39/36/30	45/42/39/35	45/42/39/35
	Sound Power Level dB (A) (SH/H/M/L)***	52/49/46/40	52/49/46/40	55/52/49/45	55/52/49/45
	Dimension (W/H/D) (mm)	845×275×180		940×298×200	
	Dimension of Package (L/W/H) (mm)	915×355×255		1010×380×285	
	Net Weight /Gross Weight (kg)	10/13		13/17	
	Room Temp. sensor	15K		15K	
	Pipe Temp. sensor	20K		20K	
Outdoor unit	**Model of Outdoor Unit**	**2TWK0512G9**		**2TWK0518G1**	
	Compressor Manufacturer/trademark	GREE		SANYO	
	Compressor Model	QX-B17xA030		C-R132H6D	
	Compressor Type	Rotary		Rotary	
	L.R.A. (A)	50		41	
	Compressor RLA(A)	9.8		7.82	
	Compressor Power Input(W)	1100		1700	
	Overload Protector	B440-145-141E		B295-155-241E	
	Throttling Method	Capillary		Capillary	
	Starting Method	Capacitor		Capacitor	
	Working Temp Range (℃)	18℃≤T≤45℃	(7)℃≤T≤24℃	18℃≤T≤45℃	(7)℃≤T≤24℃
	Condenser	Aluminum fin-copper tube		Aluminum fin-copper tube	
	Pipe Diameter (mm)	Φ7		Φ7	
	Rows-Fin Gap(mm)	2-1.4		2-1.4	
	Coil length (l) x height (H) x coil width (L)	731X495X25.4		860X660X25.4	
	Fan Motor Speed (rpm)	850		690	
	Output of Fan Motor (W)	30		60	
	Fan Motor RLA(A)	0.7		0.56	
	Fan Motor Capacitor (uF)	8		3.5	
	Air Flow Volume of Outdoor Unit m^3/h	1800		2900	
	Fan Type-Piece	Axial fan –1		Axial fan –1	
	Fan Diameter (mm)	400		473	
	Defrosting Method	Auto defrost		Auto defrost	
	Climate Type	T1		T1	
	Isolation	I		I	
	Moisture Protection	IP24		IP24	
	Permissible Excessive Operating Pressure for the Discharge Side(MPa)	2.5		2.5	
	Permissible Excessive Operating Pressure for the Suction Side(MPa)	0.6		0.6	
	Sound Pressure Level dB (A) (H/M/L)	≤52		≤56	
	Sound Power Level dB (A) (H/M/L)	≤62		≤66	
	Dimension (W/H/D) (mm)	848×540×320		955X700X424	
	Dimension of Package (L/W/H)(mm)	878X580X360		1030X460X735	
	Net Weight /Gross Weight (kg)	35/40		53/57	
	Refrigerant Charge (kg)	R-22 / 1.1		R-22 / 1.5	

Model		2MWW0524G1 2TWK0524G1		2MWW0530G1 2TWK0530G1	
Function		COOLING	HEATING	COOLING	HEATING
Rated Voltage		220V		220V	
Frequency(Hz)		60		60	
Nominal Capacity (Btu/h)		24000	24000	30000	30000
Net Capacity (Btu/h)		22000	24000	27200	30000
Power Input (W)		2250	2420	2820	3140
Nominal Current (A)		12.99	12.99	17.1	17.1
SEER/HSPF		10	7	10	7
Air Flow Volume (m^3/h) (H/M/L)**		950/800/700/600		(-)/120/1050/900	
Dehumidifying Volume (l/h)		2		2.7	
EER / C.O.P (W/W)		2.87/2.9		2.83/2.8	
Indoor unit	**Model of Indoor Unit**	**2MWW0524G1**		**2MWW0530G1**	
	Fan Motor Speed (r/min) (SH/H/M/L)	1350/1150/1000/850	1350/1150/1000/900	(-)/1400/1300/1200	(-)/1400/1300/1200
	Output of Fan Motor (w)	35		40	
	Fan Motor Capacitor (uF)	2.5		3	
	Fan Motor RLA(A)	0.31		0.4	
	Fan Type-Piece	Cross flow fan – 1		Cross flow fan – 1	
	Diameter-Length (mm)	φ98 X 765		φ106 X 890	
	Evaporator	Aluminum fin-copper tube		Aluminum fin-copper tube	
	Pipe Diameter (mm)	Φ7		Φ7	
	Row-Fin Gap(mm)	2-1.5		2-1.5	
	Coil length (l) x height (H) x coil width (L)	765X25.4X342.9		903X25.4X381	
	Swing Motor Model	MP35XX		MP24BA	
	Output of Swing Motor (W)	2.5		2.5	
	Fuse (A)	PCB 3.15A Transformer 0.2 A		PCB 5.0A Transformer 0.2 A	
	Sound Pressure Level dB (A) (SH/H/M/L)	49/44/40/37	49/44/40/37	(-)/51/48/42	(-)/51/48/42
	Sound Power Level dB (A) (SH/H/M/L)***	59/54/50/47	59/54/50/47	(-)/61/58/52	(-)/61/58/52
	Dimension (W/H/D) (mm)	1007×315×219		1178X326X243	
	Dimension of Package (L/W/H) (mm)	1073×395×313		1268X420X358	
	Net Weight /Gross Weight (kg)	15.5/20.5		17.5/24	
	Room Temp. sensor	15K		15K	
	Pipe Temp. sensor	20K		20K	
Outdoor unit	**Model of Outdoor Unit**	**2TWK0524G1**		**2TWK0530G1**	
	Compressor Manufacturer/trademark	MITSUBISHI		LG	
	Compressor Model	TS33NDAC		QP407KBB	
	Compressor Type	Rotary		Rotary	
	L.R.A. (A)	50		70	
	Compressor RLA(A)	10.3		12.4	
	Compressor Power Input(W)	2230		2750	
	Overload Protector	/		/	
	Throttling Method	Capillary		Capillary	
	Starting Method	Capacitor		Capacitor	
	Working Temp Range (℃)	18℃≤T≤45℃	(7)℃≤T≤24℃	18℃≤T≤45℃	(7)℃≤T≤24℃
	Condenser	Aluminum fin-copper tube		Aluminum fin-copper tube	
	Pipe Diameter (mm)	Φ7		Φ7.94	
	Rows-Fin Gap(mm)	2-1.4		3-1.5	
	Coil length (l) x height (H) x coil width (L)	853X660X38.1		857.4X57.15X748	
	Fan Motor Speed (rpm)	690		780	
	Output of Fan Motor (W)	60		90	
	Fan Motor RLA(A)	0.59		1.42	
	Fan Motor Capacitor (uF)	3.5		4	
	Air Flow Volume of Outdoor Unit m^3/h	3200		4000	
	Fan Type-Piece	Axial fan –1		Axial fan –1	
	Fan Diameter (mm)	520		552	
	Defrosting Method	Auto defrost		Auto defrost	
	Climate Type	T1		T1	
	Isolation	I		I	
	Moisture Protection	IP24		IP24	
	Permissible Excessive Operating Pressure for the Discharge Side(MPa)	2.5		2.5	
	Permissible Excessive Operating Pressure for the Suction Side(MPa)	0.6		0.6	
	Sound Pressure Level dB (A) (H/M/L)	≤56		≤56	
	Sound Power Level dB (A) (H/M/L)	≤66		≤66	
	Dimension (W/H/D) (mm)	955X700X396		980X790X427	
	Dimension of Package (L/W/H)(mm)	1026X735X455		1088X855X488	
	Net Weight /Gross Weight (kg)	52/57		68/72	
	Refrigerant Charge (kg)	R-22 / 1.4		R-22 / 2.6	

60Hz Cooling only models

Model		2MCW0509G1/ 2TTK0509G1	2MCW0512G1/ 2TTK0512G1
Function		COOLING	COOLING
Rated Voltage		220V	220V
Frequency(Hz)		60	60
Nominal Capacity (Btu/h)		9000	12000
Net Capacity (Btu/h)		8900	12000
Power Input (W)		840	1150
Nominal Current (A)		5.68	7.9
SEER		10	10
Air Flow Volume (m^3/h) (H/M/L)**		500/440/400/360	630/530/430/330
Dehumidifying Volume (l/h)		0.8	1.4
EER (W/W)		3.21	3.05
Indoor unit	Model of Indoor Unit	2MCW0509G1	2MCW0512G1
	Fan Motor Speed (r/min) (SH/H/M/L)	1350/1250/1100/950	1260/1070/900/730
	Output of Fan Motor (w)	10	20
	Fan Motor Capacitor (uF)	1	1
	Fan Motor RLA(A)	0.17	0.25
	Fan Type-Piece	Cross flow fan – 1	Cross flow fan – 1
	Diameter-Length (mm)	φ85 X 596	φ92 X 645
	Evaporator	Aluminum fin-copper tube	Aluminum fin-copper tube
	Pipe Diameter (mm)	Φ7	Φ7
	Row-Fin Gap(mm)	2-1.5	2-1.4
	Coil length (l) x height (H) x coil width (L)	581X25.4X264	645X25.4X267
	Swing Motor Model	MP24AA	MP24AA
	Output of Swing Motor (W)	1.5	1.5
	Fuse (A)	PCB 3.15A Transformer 0.2 A	PCB 3.15A Transformer 0.2 A
	Sound Pressure Level dB (A) (SH/H/M/L)	39/36/32/28	41/38/34/29
	Sound Power Level dB (A) (sh/H/M/L)***	49/46/42/38	51/48/44/39
	Dimension (W/H/D) (mm)	790×265×170	845×275×180
	Dimension of Package (L/W/H) (mm)	870×248×355	915×355×255
	Net Weight /Gross Weight (kg)	9/12	10/13
	Room Temp. sensor	15K	15K
	Pipe Temp. sensor	20K	20K
Outdoor unit	Model of Outdoor Unit	2TTK0509G1	2TTK0512G1
	Compressor Manufacturer/trademark	GREE	GREE
	Compressor Model	QX-B14rA030	QX-C184rE030g
	Compressor Type	Rotary	Rotary
	L.R.A. (A)	25	38
	Compressor RLA(A)	3.9	5.1
	Compressor Power Input(W)	875	1100
	Overload Protector	B180-155-141E	/
	Throttling Method	Capillary	Capillary
	Starting Method	Capacitor	Capacitor
	Working Temp Range (℃)	18℃≤T≤45℃	18℃≤T≤45℃
	Condenser	Aluminum fin-copper tube	Aluminum fin-copper tube
	Pipe Diameter (mm)	Φ9	Φ7
	Rows-Fin Gap(mm)	1-1.6	2-1.4
	Coil length (l) x height (H) x coil width (L)	781X506X22	731X495X25.4
	Fan Motor Speed (rpm)	800	850
	Output of Fan Motor (W)	30	30
	Fan Motor RLA(A)	0.37	0.35
	Fan Motor Capacitor (uF)	2.5	2
	Air Flow Volume of Outdoor Unit m^3/h	1600	1700
	Fan Type-Piece	Axial fan –1	Axial fan –1
	Fan Diameter (mm)	400	400
	Climate Type	T1	T1
	Isolation	I	I
	Moisture Protection	IP24	IP24
	Permissible Excessive Operating Pressure for the Discharge Side(MPa)	2.5	2.5
	Permissible Excessive Operating Pressure for the Suction Side(MPa)	0.6	0.6
	Sound Pressure Level dB (A) (H/M/L)	≤50	≤51
	Sound Power Level dB (A) (H/M/L)	≤60	≤61
	Dimension (W/H/D) (mm)	848X540X320	848X540X320
	Dimension of Package (L/W/H)(mm)	878X580X360	878X580X360
	Net Weight /Gross Weight (kg)	32/36	35/39
	Refrigerant Charge (kg)	R-22 / 0.77	R-22 / 1.05

Model		2MCW0512G9/ 2TTK0512G9	2MCW0518G1/ 2TTK0518G1
Function		COOLING	COOLING
Rated Voltage		115V	220V
Frequency(Hz)		60	60
Nominal Capacity (Btu/h)		12000	18000
Net Capacity (Btu/h)		11800	18000
Power Input (W)		1240	1660
Nominal Current (A)		13.31	10.1
SEER		10	10
Air Flow Volume (m^3/h) (H/M/L)**		630/530/430/330	850/780/650/550
Dehumidifying Volume (l/h)		1.4	1.8
EER (W/W)		2.8	3.18
Indoor unit	Model of Indoor Unit	2MCW0512G9	2MCW0518G1
	Fan Motor Speed (r/min) (SH/H/M/L)	1260/1070/900/730	1350/1200/1050/900
	Output of Fan Motor (w)	20	20
	Fan Motor Capacitor (uF)	4	1.5
	Fan Motor RLA(A)	0.4	0.32
	Fan Type-Piece	Cross flow fan – 1	Cross flow fan – 1
	Diameter-Length (mm)	φ92 X 645	φ98 X 710
	Evaporator	Aluminum fin-copper tube	Aluminum fin-copper tube
	Pipe Diameter (mm)	Φ7	Φ7
	Row-Fin Gap(mm)	2-1.4	2-1.4
	Coil length (l) x height (H) x coil width (L)	645X25.4X267	715X25.4X304.8
	Swing Motor Model	MP24AA	MP28VB
	Output of Swing Motor (W)	1.5	2
	Fuse (A)	PCB 3.15A Transformer 0.2 A	PCB 3.15A Transformer 0.2 A
	Sound Pressure Level dB (A) (SH/H/M/L)	42/39/36/30	45/42/39/35
	Sound Power Level dB (A) (sh/H/M/L)***	52/49/46/40	55/52/49/45
	Dimension (W/H/D) (mm)	845×275×180	940x298x200
	Dimension of Package (L/W/H) (mm)	915×355×255	1010x380x285
	Net Weight /Gross Weight (kg)	10/13	13/17
	Room Temp. sensor	15K	15K
	Pipe Temp. sensor	20K	20K
Outdoor unit	Model of Outdoor Unit	2TTK0512G9	2TTK0518G1
	Compressor Manufacturer/trademark	GREE	SANYO
	Compressor Model	QX-B17xA030	C-R132H6D
	Compressor Type	Rotary	Rotary
	L.R.A. (A)	50	41
	Compressor RLA(A)	9.8	7.82
	Compressor Power Input(W)	1100	1700
	Overload Protector	B400-145-141E	B295-155-241E
	Throttling Method	Capillary	Capillary
	Starting Method	Capacitor	Capacitor
	Working Temp Range (℃)	18℃≤T≤45℃	18℃≤T≤45℃
	Condenser	Aluminum fin-copper tube	Aluminum fin-copper tube
	Pipe Diameter (mm)	Φ7	Φ7
	Rows-Fin Gap(mm)	2-1.4	2-1.4
	Coil length (l) x height (H) x coil width (L)	731X495X25.4	860X660X25.4
	Fan Motor Speed (rpm)	850	690
	Output of Fan Motor (W)	30	60
	Fan Motor RLA(A)	0.64	0.56
	Fan Motor Capacitor (uF)	8	3.5
	Air Flow Volume of Outdoor Unit m^3/h	1800	2900
	Fan Type-Piece	Axial fan –1	Axial fan –1
	Fan Diameter (mm)	400	473
	Climate Type	T1	T1
	Isolation	I	I
	Moisture Protection	IP24	IP24
	Permissible Excessive Operating Pressure for the Discharge Side(MPa)	2.5	2.5
	Permissible Excessive Operating Pressure for the Suction Side(MPa)	0.6	0.6
	Sound Pressure Level dB (A) (H/M/L)	≤52	≤56
	Sound Power Level dB (A) (H/M/L)	≤62	≤66
	Dimension (W/H/D) (mm)	848X540X320	955X700X424
	Dimension of Package (L/W/H)(mm)	878X580X360	1030X735X460
	Net Weight /Gross Weight (kg)	35/40	51/55
	Refrigerant Charge (kg)	R-22 / 1	R-22 / 1.45

Model		2MCW0524G1/ 2TTK0524G1	2MCW0530G1/ 2TTK0530G1
Function		COOLING	COOLING
Rated Voltage		220V	220V
Frequency(Hz)		60	60
Nominal Capacity (Btu/h)		24000	30000
Net Capacity (Btu/h)		22000	27200
Power Input (W)		2250	2820
Nominal Current (A)		12.99	17.1
SEER		10	10
Air Flow Volume (m^3/h) (H/M/L)**		950/800/700/600	(-)/1200/1050/900
Dehumidifying Volume (l/h)		2	2.7
EER (W/W)		2.87	2.83
Indoor unit	Model of Indoor Unit	2MCW0524G1	2MCW0530G1
	Fan Motor Speed (r/min) (SH/H/M/L)	1350/1150/1000/850	(-)/1400/1300/1200
	Output of Fan Motor (w)	35	40
	Fan Motor Capacitor (uF)	2.5	3
	Fan Motor RLA(A)	0.31	0.4
	Fan Type-Piece	Cross flow fan – 1	Cross flow fan – 1
	Diameter-Length (mm)	φ98 X 765	φ106 X 890
	Evaporator	Aluminum fin-copper tube	Aluminum fin-copper tube
	Pipe Diameter (mm)	Φ7	Φ7
	Row-Fin Gap(mm)	2-1.5	2-1.5
	Coil length (l) x height (H) x coil width (L)	765X25.4X342.9	903X25.4X381
	Swing Motor Model	MP35XX	MP24BA
	Output of Swing Motor (W)	2.5	2.5
	Fuse (A)	PCB 3.15A Transformer 0.2 A	PCB5.0A Transformer 0.2 A
	Sound Pressure Level dB (A) (SH/H/M/L)	49/44/40/37	/51/48/42
	Sound Power Level dB (A) (sh/H/M/L)***	59/54/50/47	/61/58/52
	Dimension (W/H/D) (mm)	1007×315×219	1178X326X243
	Dimension of Package (L/W/H) (mm)	1073×395×313	1268X420X358
	Net Weight /Gross Weight (kg)	15.5/20.5	17.5/24
	Room Temp. sensor	15K	15K
	Pipe Temp. sensor	20K	20K
Outdoor unit	Model of Outdoor Unit	2TTK0524G1	2TTK0530G1
	Compressor Manufacturer/trademark	MITSUBISHI	LG
	Compressor Model	TS33NDAC	QP407KBB
	Compressor Type	Rotary	Rotary
	L.R.A. (A)	50	70
	Compressor RLA(A)	10.3	12.4
	Compressor Power Input(W)	2230	2750
	Overload Protector	/	/
	Throttling Method	Capillary	Capillary
	Starting Method	Capacitor	Capacitor
	Working Temp Range (℃)	18℃≤T≤45℃	18℃≤T≤45℃
	Condenser	Aluminum fin-copper tube	Aluminum fin-copper tube
	Pipe Diameter (mm)	Φ7	Φ9.52
	Rows-Fin Gap(mm)	2-1.4	2-1.4
	Coil length (l) x height (H) x coil width (L)	853X660X38.1	940.45X762/44
	Fan Motor Speed (rpm)	690	780
	Output of Fan Motor (W)	60	90
	Fan Motor RLA(A)	0.59	1.42
	Fan Motor Capacitor (uF)	3.5	4
	Air Flow Volume of Outdoor Unit m^3/h	3200	4000
	Fan Type-Piece	Axial fan –1	Axial fan –1
	Fan Diameter (mm)	520	552
	Climate Type	T1	T1
	Isolation	I	I
	Moisture Protection	IP24	IP24
	Permissible Excessive Operating Pressure for the Discharge Side(MPa)	2.5	2.5
	Permissible Excessive Operating Pressure for the Suction Side(MPa)	0.6	0.6
	Sound Pressure Level dB (A) (H/M/L)	≤56	≤56
	Sound Power Level dB (A) (H/M/L)	≤66	≤66
	Dimension (W/H/D) (mm)	955X700X396	980X790X427
	Dimension of Package (L/W/H)(mm)	1026X735X455	1088X855X488
	Net Weight /Gross Weight (kg)	51/56	65/69
	Refrigerant Charge (kg)	R-22 / 1.3	R-22 / 2.5

50Hz Heat pump models

Model		2MWW0509GB / 2TWK0509GB		2MWW0512GB / 2TWK0512GB	
Function		COOLING	HEATING	COOLING	HEATING
Rated Voltage		220V		220V	
Frequency(Hz)		50		50	
Nominal Capacity (Btu/h)		9000	9000	12000	12000
Net Capacity (Btu/h)		9100	10000	12000	13200
Power Input (W)		920	910	1170	1200
Nominal Current (A)		4.27	4.22	5.21	5.34
SEER/HSPF		10	7	10	7
Air Flow Volume (m^3/h) (H/M/L)**		500/440/400/360		630/540/430/330	
Dehumidifying Volume (l/h)		0.8		1.4	
EER / C.O.P (W/W)		2.9	3.2	3.00	3.2
Indoor unit	**Model of Indoor Unit**	**2MWW0509GB**		**2MWW0512GB**	
	Fan Motor Speed (r/min) (SH/H/M/L)	1260/1050/920/730		1260/1070/900/730	
	Output of Fan Motor (w)	10		20	
	Fan Motor Capacitor (uF)	1		1	
	Fan Motor RLA(A)	0.13		0.2	
	Fan Type-Piece	Cross flow fan – 1		Cross flow fan – 1	
	Diameter-Length (mm)	φ85 X 596		φ92 X 645	
	Evaporator	Aluminum fin-copper tube		Aluminum Fin-copper Tube	
	Pipe Diameter (mm)	φ7		φ7	
	Row-Fin Gap(mm)	2-1.5		2-1.4	
	Coil length (l) x height (H) x coil width (L)	581X25.4X264		645X25.4X267	
	Swing Motor Model	MP24AA		MP24AA	
	Output of Swing Motor (W)	1.5		1.5	
	Fuse (A)	PCB 3.15A Transformer 0.2A		PCB 3.15A Transformer 0.2A	
	Sound Pressure Level dB (A) (SH/H/M/L)	40/37/35/32		42/39/36/33	
	Sound Power Level dB (A) (SH/H/M/L)***	50/47/45/42		52/49/46/43	
	Dimension (W/H/D) (mm)	789×265×175		845×275×180	
	Dimension of Package (L/W/H) (mm)	873×251×370		918×258×370	
	Net Weight /Gross Weight (kg)	9/12		10/13	
	Room Temp. sensor	15K		15K	
	Pipe Temp. sensor	20K		20K	
Outdoor unit	**Model of Outdoor Unit**	**2TWK0509GB**		**2TWK0512GB**	
	Compressor Manufacturer/trademark	HITACHI		HITACHI	
	Compressor Model	SG173CV-A5ETN		SL222SV-C7LU	
	Compressor Type	Rotary		Rotary	
	L.R.A. (A)	18		30.2	
	Compressor RLA(A)	4.5		5.6	
	Compressor Power Input(W)	950		1190	
	Overload Protector	/		UP3-23G	
	Throttling Method	Capillary		Capillary	
	Starting Method	Capacitor		Capacitor	
	Working Temp Range (℃)	18℃≤T≤45℃	(7)℃≤T≤24℃	18℃≤T≤45℃	(7)℃≤T≤24℃
	Condenser	Aluminum fin-copper tube		Aluminum Fin-copper Tube	
	Pipe Diameter (mm)	φ7		φ7	
	Rows-Fin Gap(mm)	1-1.4		2-1.6	
	Coil length (l) x height (H) x coil width (L)	741×12.7×495.3		755×25.4×495	
	Fan Motor Speed (rpm)	830		850	
	Output of Fan Motor (W)	30		30	
	Fan Motor RLA(A)	0.37		0.42	
	Fan Motor Capacitor (uF)	2.5		3	
	Air Flow Volume of Outdoor Unit m^3/h	1800		1800	
	Fan Type-Piece	Cross-flow		Axial fan –1	
	Fan Diameter (mm)	φ400		φ400	
	Defrosting Method	Automatic Defrosting		Automatic Defrosting	
	Climate Type	T1		T1	
	Isolation	I		I	
	Moisture Protection	IP24		IP24	
	Permissible Excessive Operating Pressure for the Discharge Side(MPa)	2.5		2.5	
	Permissible Excessive Operating Pressure for the Suction Side(MPa)	0.6		0.6	
	Sound Pressure Level dB (A) (H/M/L)	≤50		≤52	
	Sound Power Level dB (A) (H/M/L)	≤60		≤62	
	Dimension (W/H/D) (mm)	848×540×320		848×540×320	
	Dimension of Package (L/W/H)(mm)	881×363×595		881×605×363	
	Net Weight /Gross Weight (kg)	28/32		35/40	
	Refrigerant Charge (kg)	R-22 / 0.6		R-22 / 1.23	

Model		2MWW0518GB / 2TWK0518GB		2MWW0524GB / 2TWK0524GB	
Function		COOLING	HEATING	COOLING	HEATING
Rated Voltage		220V		220V	
Frequency(Hz)		50		50	
Nominal Capacity (Btu/h)		18000	18000	24000	24000
Net Capacity (Btu/h)		18100	19450	21850	23880
Power Input (W)		1700	1750	2200	2300
Nominal Current (A)		7.88	8.1	10.2	10.67
SEER/HSPF		10	7	10	7
Air Flow Volume (m^3/h) (H/M/L)**		850/780/650/550		950/800/700/600	
Dehumidifying Volume (l/h)		1.8		2	
EER / C.O.P (W/W)		3.12	3.3	2.91	3.0
Indoor unit	**Model of Indoor Unit**	**2MWW0518GB**		**2MWW0524GB**	
	Fan Motor Speed (r/min) (SH/H/M/L)	1350/1200/1050/900		1350/1150/1000/850	
	Output of Fan Motor (w)	20		30	
	Fan Motor Capacitor (uF)	1.5		2.5	
	Fan Motor RLA(A)	0.31		0.31	
	Fan Type-Piece	Cross flow fan – 1		Cross flow fan – 1	
	Diameter-Length (mm)	φ98 X 710		φ98 X 765	
	Evaporator	Aluminum fin-copper tube		Aluminum fin-copper tube	
	Pipe Diameter (mm)	φ7		φ7	
	Row-Fin Gap(mm)	2-1.4		2-1.5	
	Coil length (l) x height (H) x coil width (L)	715X25.4X304.8		765X25.4X342.9	
	Swing Motor Model	MP28VB		MP35XX	
	Output of Swing Motor (W)	2.0		2.5	
	Fuse (A)	PCB 3.15A Transformer 0.2 A		PCB 3.15A Transformer 0.2 A	
	Sound Pressure Level dB (A) (SH/H/M/L)	45/42/39/35		49/44/40/37	
	Sound Power Level dB (A) (SH/H/M/L)***	55/52/49/45		59)54/50/47	
	Dimension (W/H/D) (mm)	940×200×298		1007×315×219	
	Dimension of Package (L/W/H) (mm)	1010×285×380		1076×398×328	
	Net Weight /Gross Weight (kg)	13/17		15.5/20.5	
	Room Temp. sensor	15K		15K	
	Pipe Temp. sensor	20K		20K	
Outdoor unit	**Model of Outdoor Unit**	**2TWK0518GB**		**2TWK0524GB**	
	Compressor Manufacturer/trademark	GREE		PANASONIC	
	Compressor Model	QX-F305F050g		2V38S225AUB	
	Compressor Type	Rotary		Rotary	
	L.R.A. (A)	44		47.8	
	Compressor RLA(A)	7.7		9.6	
	Compressor Power Input(W)	1660±5%		2070	
	Overload Protector	/		/	
	Throttling Method	Capillary		Capillary	
	Starting Method	Capacitor		Capacitor	
	Working Temp Range (℃)	18℃≤T≤45℃	(7)℃≤T≤24℃	18℃≤T≤45℃	(7)℃≤T≤24℃
	Condenser	Aluminum fin-copper tube		Aluminum fin-copper tube	
	Pipe Diameter (mm)	φ7		φ7.94	
	Rows-Fin Gap(mm)	2-1.4		2-1.4	
	Coil length (l) x height (H) x coil width (L)	775×38.1×660		853×38.1×660	
	Fan Motor Speed (rpm)	780		690	
	Output of Fan Motor (W)	48		60	
	Fan Motor RLA(A)	0.62		0.58	
	Fan Motor Capacitor (uF)	3.5		3.5	
	Air Flow Volume of Outdoor Unit m^3/h	2800		3200	
	Fan Type-Piece	Axial fan –1		Axial fan –1	
	Fan Diameter (mm)	φ460		φ520	
	Defrosting Method	Automatic Defrosting		Automatic Defrosting	
	Climate Type	T1		T1	
	Isolation	I		I	
	Moisture Protection	IP24		IP24	
	Permissible Excessive Operating Pressure for the Discharge Side(MPa)	2.5		2.5	
	Permissible Excessive Operating Pressure for the Suction Side(MPa)	0.6		0.6	
	Sound Pressure Level dB (A) (H/M/L)	≤56		≤56	
	Sound Power Level dB (A) (H/M/L)	≤66		≤66	
	Dimension (W/H/D) (mm)	913×680×378		955×700×396	
	Dimension of Package (L/W/H)(mm)	997×431×765		1029×458×750	
	Net Weight /Gross Weight (kg)	52/57		56/61	
	Refrigerant Charge (kg)	R-22 / 1.40		R-22 / 1.90	

Model		2MWW0530GB / 2TWK0530GB	
Function		COOLING	HEATING
Rated Voltage		220V	
Frequency(Hz)		50	
Nominal Capacity (Btu/h)		30000	30000
Net Capacity (Btu/h)		27300	28300
Power Input (W)		2768	2900
Nominal Current (A)		12.24	13.45
SEER/HSPF		10	7
Air Flow Volume (m^3/h) (H/M/L)**		(-)/1200/1090/900	
Dehumidifying Volume (l/h)		2.7	
EER / C.O.P (W/W)		2.89	2.9
Indoor unit	Model of Indoor Unit	2MWW0530GB	
	Fan Motor Speed (r/min) (SH/H/M/L)	(-)/1410/1280/1200	
	Output of Fan Motor (w)	35	
	Fan Motor Capacitor (uF)	3	
	Fan Motor RLA(A)	0.3	
	Fan Type-Piece	Cross flow fan – 1	
	Diameter-Length (mm)	φ106 X 890	
	Evaporator	Aluminum fin-copper tube	
	Pipe Diameter (mm)	φ7	
	Row-Fin Gap(mm)	2-1.5	
	Coil length (l) x height (H) x coil width (L)	903X25.4X381	
	Swing Motor Model	MP24BA	
	Output of Swing Motor (W)	1.5	
	Fuse (A)	PCB 5A	
	Sound Pressure Level dB (A) (SH/H/M/L)	(-)/51/48/45	
	Sound Power Level dB (A) (SH/H/M/L)***	(-)/61/58/55	
	Dimension (W/H/D) (mm)	1178×326×253	
	Dimension of Package (L/W/H) (mm)	1265×417×343	
	Net Weight /Gross Weight (kg)	17.5/24	
	Room Temp. sensor	15K	
	Pipe Temp. sensor	20K	
Outdoor unit	Model of Outdoor Unit	2TWK0530GB	
	Compressor Manufacturer/trademark	MITSUBISHI	
	Compressor Model	LH48VBGC	
	Compressor Type	Rotary	
	L.R.A. (A)	63	
	Compressor RLA(A)	12.1	
	Compressor Power Input(W)	2610	
	Overload Protector	/	
	Throttling Method	Capillary	
	Starting Method	Capacitor	
	Working Temp Range (℃)	18℃≤T≤45℃	(7)℃≤T≤24℃
	Condenser	Aluminum fin-copper tube	
	Pipe Diameter (mm)	φ9.52	
	Rows-Fin Gap(mm)	2-1.4	
	Coil length (l) x height (H) x coil width (L)	953×44×762	
	Fan Motor Speed (rpm)	780	
	Output of Fan Motor (W)	90	
	Fan Motor RLA(A)	0.8	
	Fan Motor Capacitor (uF)	7	
	Air Flow Volume of Outdoor Unit m^3/h	4000	
	Fan Type-Piece	Axial fan –1	
	Fan Diameter (mm)	φ552	
	Defrosting Method	Automatic Defrosting	
	Climate Type	T1	
	Isolation	I	
	Moisture Protection	IP24	
	Permissible Excessive Operating Pressure for the Discharge Side(MPa)	2.5	
	Permissible Excessive Operating Pressure for the Suction Side(MPa)	0.6	
	Sound Pressure Level dB (A) (H/M/L)	≤58	
	Sound Power Level dB (A) (H/M/L)	≤68	
	Dimension (W/H/D) (mm)	980×790×427	
	Dimension of Package (L/W/H)(mm)	1085×840×485	
	Net Weight /Gross Weight (kg)	68/72	
	Refrigerant Charge (kg)	R-22 / 2.9	

50Hz Cooling only models

Model		2MCW0509GB / 2TTK0509GB	2MCW0512GB / 2TTK0512GB
Function		COOLING	COOLING
Rated Voltage		220V	220V
Frequency(Hz)		50	50
Nominal Capacity (Btu/h)		9000	12000
Net Capacity (Btu/h)		9100	12000
Power Input (W)		920	1170
Nominal Current (A)		4.27	5.21
SEER		10	10
Air Flow Volume (m^3/h) (H/M/L)**		500/440/400/360	630/540/430/330
Dehumidifying Volume (l/h)		0.8	1.4
EER (W/W)		2.9	3
Indoor unit	**Model of Indoor Unit**	**2MWW0509GB**	**2MCW0512GB**
	Fan Motor Speed (r/min) (SH/H/M/L)	1260/1050/920/730	1260/1070/900/730/-
	Output of Fan Motor (w)	10	20
	Fan Motor Capacitor (uF)	1	1
	Fan Motor RLA(A)	0.13	0.20
	Fan Type-Piece	Cross flow fan – 1	Cross flow fan – 1
	Diameter-Length (mm)	φ85 X 596	φ92 X 645
	Evaporator	Aluminum fin-copper tube	Aluminum fin-copper tube
	Pipe Diameter (mm)	φ7	φ7
	Row-Fin Gap(mm)	2-1.5	2-1.4
	Coil length (l) x height (H) x coil width (L)	581X25.4X264	645X25.4X267
	Swing Motor Model	MP24AA	MP24AA
	Output of Swing Motor (W)	1.5	1.5
	Fuse (A)	PCB 3.15A Transformer 0.2A	PCB 3.15A Transformer 0.2A
	Sound Pressure Level dB (A) (SH/H/M/L)	40/37/35/32	42/39/36/33/-
	Sound Power Level dB (A) (SH/H/M/L)***	50/47/45/42	52/49/46/43/-
	Dimension (W/H/D) (mm)	789×265×175	845×275×180
	Dimension of Package (L/W/H) (mm)	873×251×370	918×258×370
	Net Weight /Gross Weight (kg)	9/12	10/13
	Room Temp. sensor	15K	15K
	Pipe Temp. sensor	20K	20K
Outdoor unit	**Model of Outdoor Unit**	**2TWK0509GB**	**2TTK0512GB**
	Compressor Manufacturer/trademark	HITACHI	HITACHI
	Compressor Model	SG173CV-A5ETN	SL222SV-C7LU
	Compressor Type	Rotary	Rotary
	L.R.A. (A)	18	30.2
	Compressor RLA(A)	4.5	5.6
	Compressor Power Input(W)	950	1190
	Overload Protector	/	UP3-23G
	Throttling Method	Capillary	Capillary
	Starting Method	Capacitor	Capacitor
	Working Temp Range (℃)	18℃≤T≤45℃	18℃≤T≤45℃
	Condenser	Aluminum fin-copper tube	Aluminum fin-copper tube
	Pipe Diameter (mm)	φ7	φ7.94
	Rows-Fin Gap(mm)	1-1.4	1-1.4
	Coil length (l) x height (H) x coil width (L)	741×12.7×495.3	758×19.05×495
	Fan Motor Speed (rpm)	830	850
	Output of Fan Motor (W)	30	30
	Fan Motor RLA(A)	0.37	0.42
	Fan Motor Capacitor (uF)	2.5	3
	Air Flow Volume of Outdoor Unit m^3/h	1800	1800
	Fan Type-Piece	Cross-flow	Axial-flow
	Fan Diameter (mm)	φ400	φ400
	Defrosting Method	-	-
	Climate Type	T1	T1
	Isolation	I	I
	Moisture Protection	IP24	IP24
	Permissible Excessive Operating Pressure for the Discharge Side(MPa)	2.5	2.6
	Permissible Excessive Operating Pressure for the Suction Side(MPa)	0.6	0.6
	Sound Pressure Level dB (A) (H/M/L)	≤50	≤52
	Sound Power Level dB (A) (H/M/L)	≤60	≤62
	Dimension (W/H/D) (mm)	848×540×320	848×540×320
	Dimension of Package (L/W/H)(mm)	881×363×595	881×605×363
	Net Weight /Gross Weight (kg)	28/32	35/40
	Refrigerant Charge (kg)	R-22 / 0.6	R-22/0.73

Model		2MCW0518GB / 2TTK0518GB	2MCW0524GB / 2TTK0524GB
Function		COOLING	COOLING
Rated Voltage		220V	220V
Frequency(Hz)		50	50
Nominal Capacity (Btu/h)		18000	24000
Net Capacity (Btu/h)		18083	21836
Power Input (W)		1750	2200
Nominal Current (A)		7.8	10.2
SEER		10	10
Air Flow Volume (m^3/h) (H/M/L)**		850/780/650/550	950/800/700/600
Dehumidifying Volume (l/h)		1.8	2
EER (W/W)		3.03	2.91
Indoor unit	**Model of Indoor Unit**	**2MCW0518GB**	**2MCW0524GB**
	Fan Motor Speed (r/min) (SH/H/M/L)	1350/1200/1050/900/-	1350/1150/1000/850/-
	Output of Fan Motor (w)	20	30
	Fan Motor Capacitor (uF)	1.5	2.5
	Fan Motor RLA(A)	0.31	0.31
	Fan Type-Piece	Cross flow fan – 1	Cross flow fan – 1
	Diameter-Length (mm)	φ98 X 710	φ98 X 765
	Evaporator	Aluminum fin-copper tube	Aluminum fin-copper tube
	Pipe Diameter (mm)	φ7	φ7
	Row-Fin Gap(mm)	2-1.4	2-1.5
	Coil length (l) x height (H) x coil width (L)	715X25.4X304.8	765X342.9X25.4
	Swing Motor Model	MP28VB	MP35XX
	Output of Swing Motor (W)	2	2.5
	Fuse (A)	PCB 3.15A Transformer 0.2A	PCB 3.15A Transformer 0.2A
	Sound Pressure Level dB (A) (SH/H/M/L)	45/42/39/35/	49/44/40/37/-
	Sound Power Level dB (A) (SH/H/M/L)***	55/52/49/45/	59/54/50/47/-
	Dimension (W/H/D) (mm)	940×200×298	1007×315×219
	Dimension of Package (L/W/H) (mm)	1010×285×380	1076X398X328
	Net Weight /Gross Weight (kg)	13/17	15.5/20.5
	Room Temp. sensor	15K	15K
	Pipe Temp. sensor	20K	20K
Outdoor unit	**Model of Outdoor Unit**	**2TTK0518GB**	**2TTK0524GB**
	Compressor Manufacturer/trademark	GREE	PANASONIC
	Compressor Model	QX-F305F050g	2V38S225AUB
	Compressor Type	Rotary	Rotary
	L.R.A. (A)	41	47.8
	Compressor RLA(A)	7.7	9.6
	Compressor Power Input(W)	1660	2070
	Overload Protector	/	/
	Throttling Method	Capillary	Capillary
	Starting Method	Capacitor	Capacitor
	Working Temp Range (℃)	18℃≤T≤45℃	18℃≤T≤45℃
	Condenser	Aluminum fin-copper tube	Aluminum fin-copper tube
	Pipe Diameter (mm)	φ9.52	φ7
	Rows-Fin Gap(mm)	1-1.4	2-1.4
	Coil length (l) x height (H) x coil width (L)	822×22×660	853×38.1×660
	Fan Motor Speed (rpm)	780	690
	Output of Fan Motor (W)	48	60
	Fan Motor RLA(A)	0.62	0.58
	Fan Motor Capacitor (uF)	3.5	3.5
	Air Flow Volume of Outdoor Unit m^3/h	2800	3200
	Fan Type-Piece	Axial-flow	Axial-flow
	Fan Diameter (mm)	φ460	φ520
	Defrosting Method	-	-
	Climate Type	T1	T1
	Isolation	I	I
	Moisture Protection	IP24	IP24
	Permissible Excessive Operating Pressure for the Discharge Side(MPa)	2.6	2.5
	Permissible Excessive Operating Pressure for the Suction Side(MPa)	0.6	0.6
	Sound Pressure Level dB (A) (H/M/L)	≤56	≤56
	Sound Power Level dB (A) (H/M/L)	≤66	≤66
	Dimension (W/H/D) (mm)	913×680×378	955×700×396
	Dimension of Package (L/W/H)(mm)	997×431×765	1029×458×750
	Net Weight /Gross Weight (kg)	46/50	54/59
	Refrigerant Charge (kg)	R-22 / 1.20	R-22 / 1.70

Model		2MCW0530B / 2TTK0530B
Function		COOLING
Rated Voltage		220V
Frequency(Hz)		50
Nominal Capacity (Btu/h)		30000
Net Capacity (Btu/h)		27300
Power Input (W)		2768
Nominal Current (A)		12.24
SEER		10
Air Flow Volume (m^3/h) (H/M/L)**		(-)/1200/1090/900
Dehumidifying Volume (l/h)		2.7
EER (W/W)		2.89
Indoor unit	**Model of Indoor Unit**	**2MCW0530GB**
	Fan Motor Speed (r/min) (SH/H/M/L)	(-)/1410/1280/1200
	Output of Fan Motor (w)	35
	Fan Motor Capacitor (uF)	3
	Fan Motor RLA(A)	0.30
	Fan Type-Piece	Cross flow fan – 1
	Diameter-Length (mm)	φ106 X 890
	Evaporator	Aluminum fin-copper tube
	Pipe Diameter (mm)	φ7
	Row-Fin Gap(mm)	2-1.5
	Coil length (l) x height (H) x coil width (L)	903X25.4X381
	Swing Motor Model	MP24BA
	Output of Swing Motor (W)	1.5
	Fuse (A)	PCB 5A
	Sound Pressure Level dB (A) (SH/H/M/L)	(-)/51/48/45
	Sound Power Level dB (A) (SH/H/M/L)***	(-)/61/58/55
	Dimension (W/H/D) (mm)	1178×326×253
	Dimension of Package (L/W/H) (mm)	1268×420×358
	Net Weight /Gross Weight (kg)	17.5/24
	Room Temp. sensor	15K
	Pipe Temp. sensor	20K
Outdoor unit	**Model of Outdoor Unit**	**2TTK0530GB**
	Compressor Manufacturer/trademark	MITSUBISHI
	Compressor Model	LH48VBGC
	Compressor Type	Rotary
	L.R.A. (A)	63
	Compressor RLA(A)	12.1
	Compressor Power Input(W)	2610
	Overload Protector	/
	Throttling Method	Capillary
	Starting Method	Capacitor
	Working Temp Range (℃)	18℃≤T≤45℃
	Condenser	Aluminum fin-copper tube
	Pipe Diameter (mm)	φ7.94
	Rows-Fin Gap(mm)	2-1.6
	Coil length (l) x height (H) x coil width (L)	953×38.1×748
	Fan Motor Speed (rpm)	780
	Output of Fan Motor (W)	90
	Fan Motor RLA(A)	0.8
	Fan Motor Capacitor (uF)	7
	Air Flow Volume of Outdoor Unit m^3/h	4000
	Fan Type-Piece	Axial-flow
	Fan Diameter (mm)	φ552
	Defrosting Method	-
	Climate Type	T1
	Isolation	I
	Moisture Protection	IP24
	Permissible Excessive Operating Pressure for the Discharge Side(MPa)	2.5
	Permissible Excessive Operating Pressure for the Suction Side(MPa)	0.6
	Sound Pressure Level dB (A) (H/M/L)	≤58
	Sound Power Level dB (A) (H/M/L)	≤68
	Dimension (W/H/D) (mm)	980×790×427
	Dimension of Package (L/W/H)(mm)	1088×855×488
	Net Weight /Gross Weight (kg)	63/71
	Refrigerant Charge (kg)	R-22 / 2.5

Piping Specifications

60Hz Heat pump

Model				2MWW0509A1 2TWK0509A1	2MWW0512A1 2TWK0512A1	2MWW0512A9 2TWK0512A9
Connection Pipe	Length (m)			7.5	7.5	7.5
	Gas additional charge(g/m)			15	25	20
	Outer Diameter	Liquid Pipe (mm)	Φ6(1/4”)		Φ6(1/4”)	Φ6(1/4”)
		Gas Pipe (mm)	Φ9.52(3/8”)		Φ12(1/4”)	Φ12(1/4”)
	Max Distance	Height (m)	10		10	10
		Length (m)	15		20	20

Model				2MWW0518A1 2TWK0518A1	2MWW0524A1 2TWK0524A1	2MWW0530A1 2TWK0530A1
Connection Pipe	Length (m)			7.5	7.5	7.5
	Gas additional charge(g/m)			30	50	50
	Outer Diameter	Liquid Pipe (mm)	Φ6(1/4”)		Φ6(1/4”)	Φ6(1/4”)
		Gas Pipe (mm)	Φ12(1/2”)		Φ16(5/8”)	Φ16(5/8”)
	Max Distance	Height (m)	10		10	10
		Length (m)	25		25	30

60Hz Cooling only

Model				2MCW0509A1 2TTK0509A1	2MCW0512A1 2TTK0512A1	2MCW0512A9 2TTK0512A9
Connection Pipe	Length (m)			7.5	7.5	7.5
	Gas additional charge(g/m)			15	25	20
	Outer Diameter	Liquid Pipe (mm)	Φ6(1/4”)		Φ6(1/4”)	Φ6(1/4”)
		Gas Pipe (mm)	Φ9.52(3/8”)		Φ12(1/4”)	Φ12(1/4”)
	Max Distance	Height (m)	10		10	10
		Length (m)	15		20	20

Model				2MCW0518A1 2TTK0518A1	2MCW0524A1 2TTK0524A1	2MCW0530A1 2TTK0530A1
Connection Pipe	Length (m)			7.5	7.5	7.5
	Gas additional charge(g/m)			30	50	50
	Outer Diameter	Liquid Pipe (mm)	Φ6(1/4”)		Φ6(1/4”)	Φ6(1/4”)
		Gas Pipe (mm)	Φ12(1/2”)		Φ16(5/8”)	Φ16(5/8”)
	Max Distance	Height (m)	10		10	10
		Length (m)	25		25	30

50Hz Heat pump

Model			2MWW0509AB/ 2TWK0509AB	2MWW0512AB/ 2TWK0512AB
Connection Pipe	Length (m)		5	5
	Gas additional charge(g/m)		20	20
	Outer Diameter	Liquid Pipe	φ6(1/4”)	φ6(1/4”)
		Gas Pipe (mm)	φ9.52(3/8”)	φ12(1/2”)
	Max Distance	Height (m)	10	10
		Length (m)	15	20

Model		2MWW0518AB/2TWK0518AB	2MWW0524AB/ 2TWK0524AB	2MWW0530AB/ 2TWK0530AB
Connection Pipe	Length (m)	5	5	5
	Gas additional charge(g/m)	20	50	50
	Outer Diameter	φ6(1/4”)	φ6(1/4”)	φ6(1/4”)
		φ12(1/2”)	φ16(5/8”)	φ16(5/8”)
	Max Distance	10	10	10
		25	25	30

50Hz Cooling only

Model			2MCW0509AB/ 2TTK0509AB	2MCW0512AB/ 2TTK0512AB
Connection Pipe	Length (m)		5	5
	Gas additional charge(g/m)		15	15
	Outer Diameter	Liquid Pipe	φ6(1/4”)	φ6(1/4”)
		Gas Pipe (mm)	φ9.52(3/8”)	φ12(1/2”)
	Max Distance	Height (m)	10	10
		Length (m)	15	20

Model		2MCW0518AB/ 2TTK0518AB	2MCW0524AB/ 2TTK0524AB	2MCW0530AB/ 2TTK0530AB
Connection Pipe	Length (m)	5	5	5
	Gas additional charge(g/m)	15	15	15
	Outer Diameter	φ6(1/4”)	φ6(1/4”)	φ6(1/4”)
		φ12(1/2”)	φ16(5/8”)	φ16(5/8”)
	Max Distance	10	10	10
		25	25	30

Capacity Variation Ratio According to Pipe Length

**For 9 Mbh models:

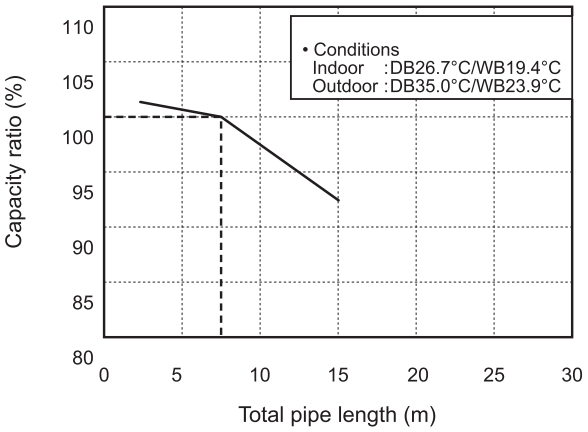

Standard pipe length 7.6m
Maximum pipe length: 9Mbh 15m

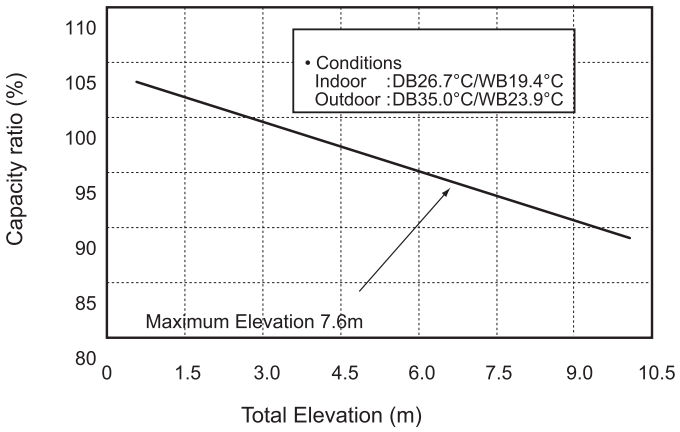

Maximum pipe length: 10m

**For 12 Mbh models:

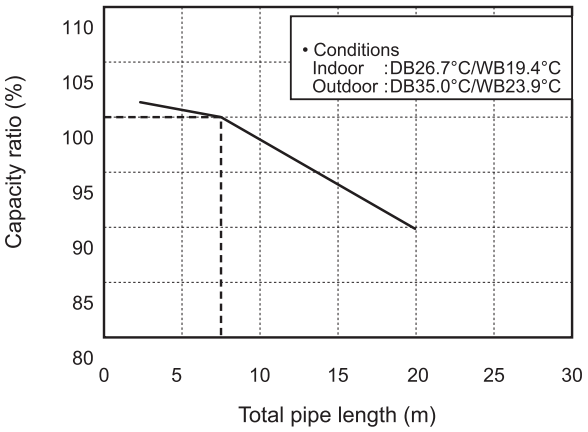

Standard pipe length 7.6m
Maximum pipe length: 12Mbh 20m

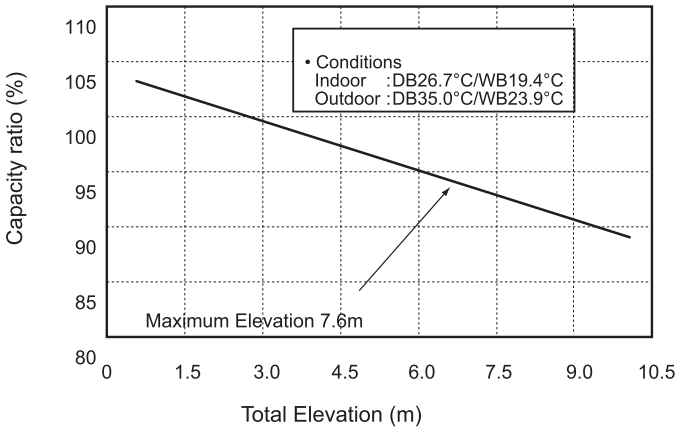

Maximum pipe length: 10m

Capacity Variation Ratio According to Pipe Length

**For 18/24 Mbh models:

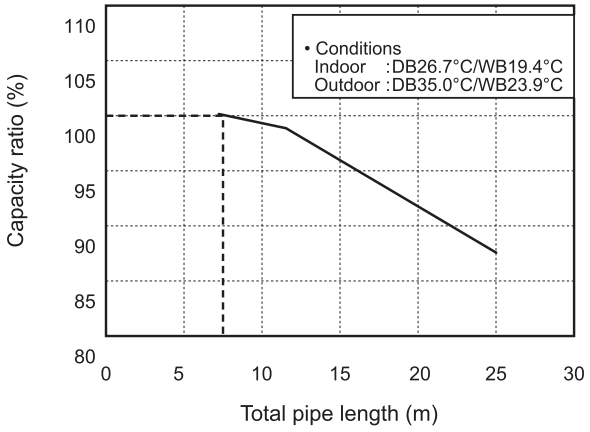

Standard pipe length 7.6m
Maximum pipe length: 18/24Mbh 25m

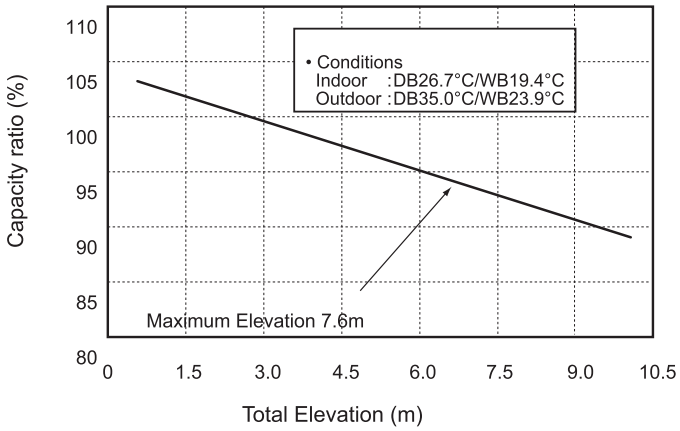

Maximum pipe length: 10m

**For 30 Mbh models:

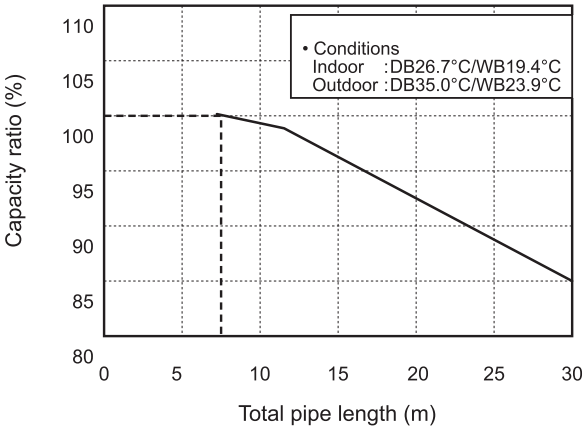

Standard pipe length 7.6m
Maximum pipe length: 30Mbh 30m

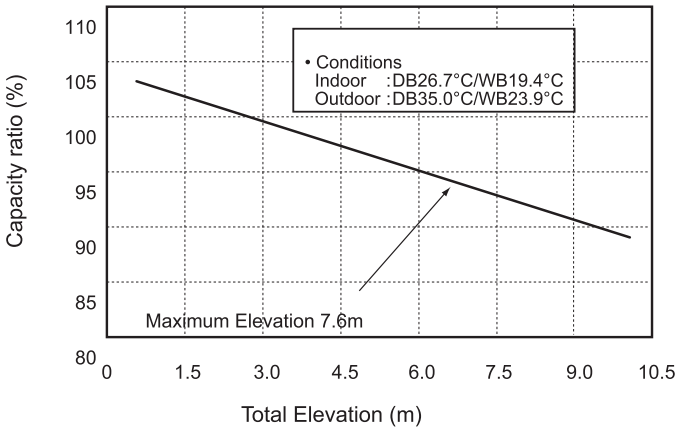

Maximum pipe length: 10m

System Diagram

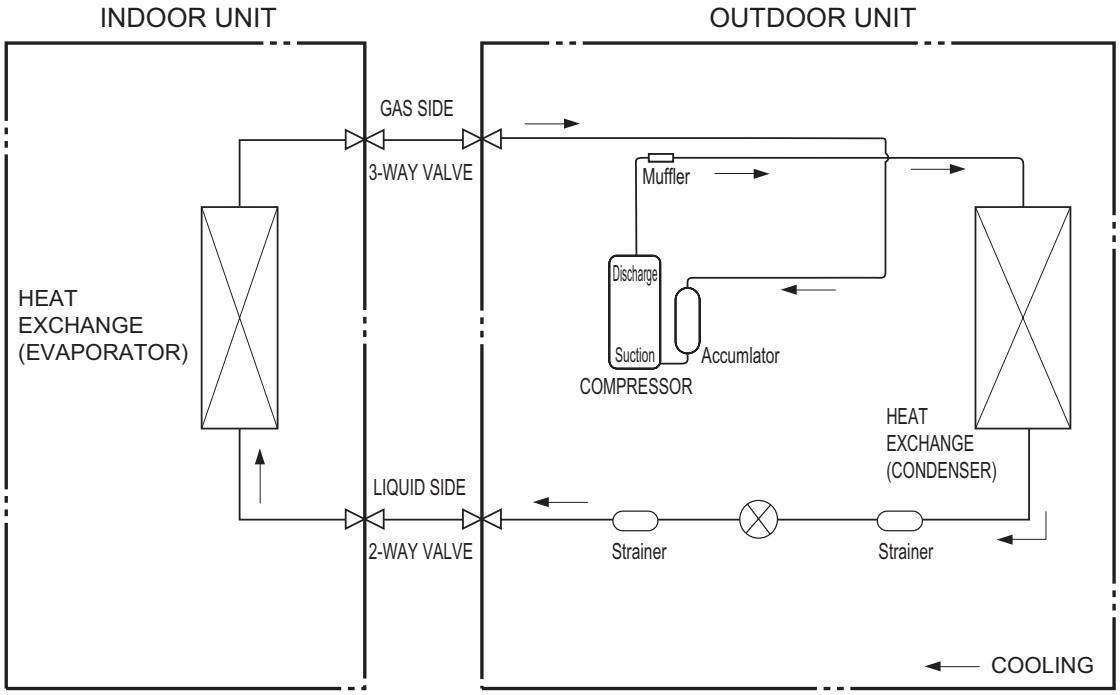

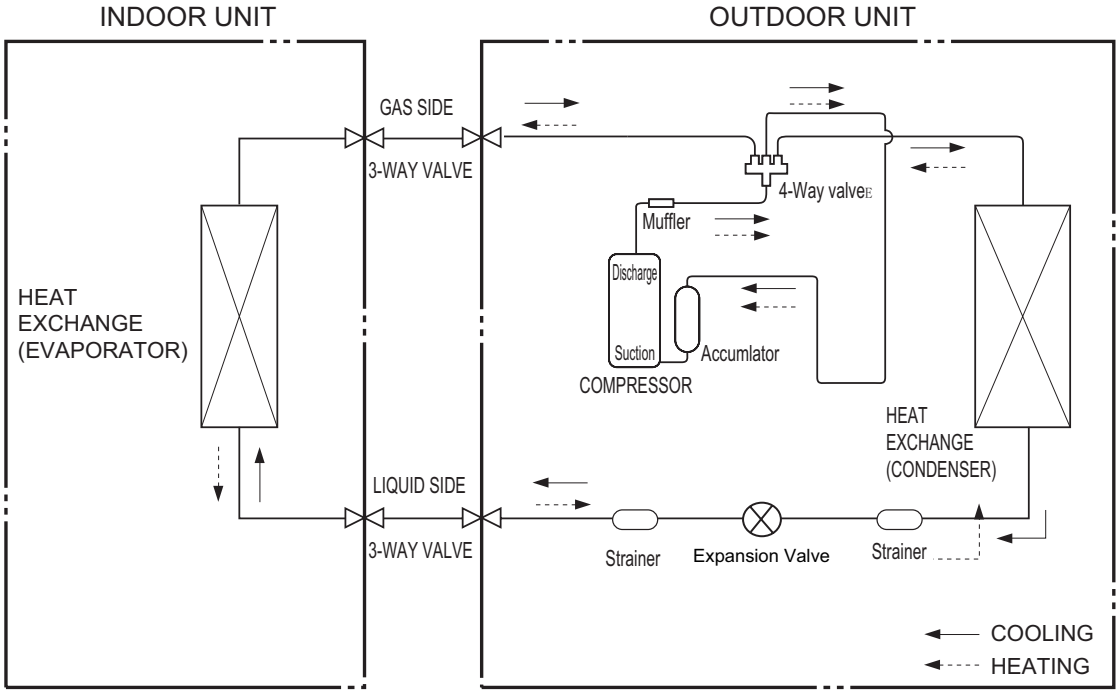

Dimensions

Indoor Units

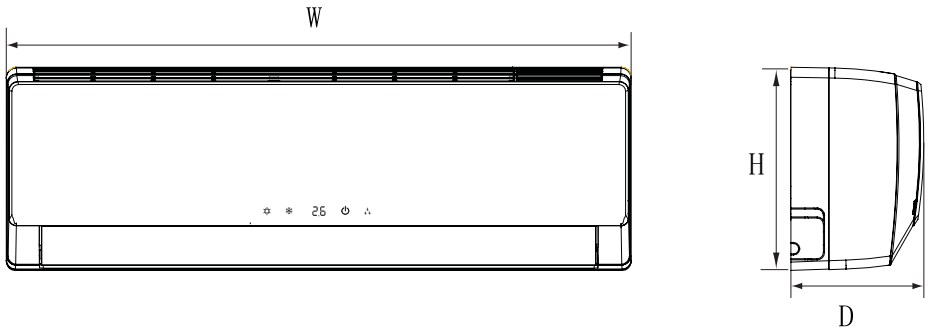

50Hz & 60Hz Models

Dimensions(mm)			
unit	W(width)	H(height)	D(depth)
2MCW/2MWW0509G	790	265	170
2MCW/2MWW0512G	845	275	180
2MCW/2MWW0518G	940	298	200
2MCW/2MWW0524G	1007	315	219
2MCW/2MWW0530G	1178	326	243

Outdoor Units

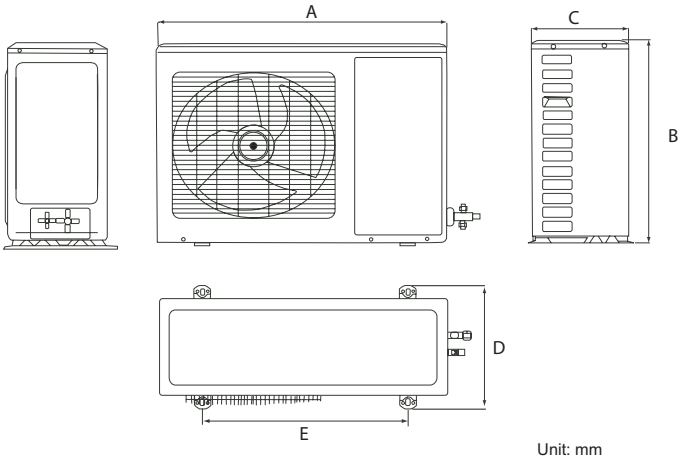

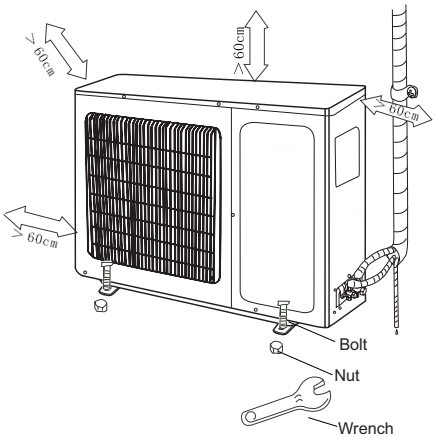

60Hz Models

Dimensions(mm)					
unit	A(width)	B(height)	C(depth)	D	E
2TTK/2TWK0509G	762	540	257	320	540
2TTK/2TWK0512G	762	540	257	320	540
2TTK/2TWK0518G	892	700	342	424	560
2TTK/2TWK0524G	892	700	341	396	560
2TTK/2TWK0530G	920	790	370	427	610

50Hz Models

Dimensions(mm)					
unit	A(width)	B(height)	C(depth)	D	E
2TTK/2TWK0509G	762	540	257	320	540
2TTK/2TWK0512G	762	540	257	320	540
2TTK/2TWK0518G	846	680	300	378	550
2TTK/2TWK0524G	892	700	341	396	560
2TTK/2TWK0530G	920	790	370	427	610

Electrical Characteristics

60Hz Models

Model		Power Supply				Current		OMF	
Indoor	Outdoor	Hz	Voltage	Min.	Max.	MCA	MFA	W	FLA
2MWW0509G1	2TWK0509G1	60Hz	220V	198V	242V	5.6	15	30	0.37
2MWW0512G1	2TWK0512G1	60Hz	220V	198V	242V	7.1	15	30	0.35
2MWW0512G9	2TWK0512G9	60Hz	115V	103V	127V	13.6	25	30	0.7
2MWW0518G1	2TWK0189G1	60Hz	220V	198V	242V	10.9	25	60	0.56
2MWW0524G1	2TWK0524G1	60Hz	220V	198V	242V	14.0	25	60	0.59
2MWW0530G1	2TWK0530G1	60Hz	220V	198V	242V	17.8	25	90	1.42
2MCW0509G1	2TTK0509G1	60Hz	220V	198V	242V	5.6	15	30	0.37
2MCW0512G1	2TTK0512G1	60Hz	220V	198V	242V	7.1	15	30	0.35
2MCW0512G9	2TTK0512G9	60Hz	115V	103V	127V	13.6	25	30	0.64
2MCW0518G1	2TTK0189G1	60Hz	220V	198V	242V	10.9	25	60	0.56
2MCW0524G1	2TTK0524G1	60Hz	220V	198V	242V	14.0	25	60	0.59
2MCW0530G1	2TTK0530G1	60Hz	220V	198V	242V	17.8	25	90	1.42

50Hz Models

Model		Power Supply				Current		OMF	
Indoor	Outdoor	Hz	Voltage	Min.	Max.	MCA	MFA	W	FLA
2MWW0509GB	2TWK0509GB	50Hz	220V	198V	242V	6.3	15	30	0.37
2MWW0512AB	2TWK0512AB	50Hz	220V	198V	242V	7.8	15	30	0.42
2MWW0518AB	2TWK0518AB	50Hz	220V	198V	242V	10.8	25	48	0.62
2MWW0524AB	2TWK0524AB	50Hz	220V	198V	242V	13.1	25	60	0.58
2MWW0530AB	2TWK0530AB	50Hz	220V	198V	242V	16.5	25	90	0.8
2MCW0509GB	2TTK0509GB	50Hz	220V	198V	242V	6.3	15	30	0.37
2MCW0512AB	2TTK0512AB	50Hz	220V	198V	242V	7.8	15	30	0.42
2MCW0518AB	2TTK0518AB	50Hz	220V	198V	242V	10.8	25	48	0.62
2MCW0524AB	2TTK0524AB	50Hz	220V	198V	242V	13.1	25	60	0.58
2MCW0530AB	2TTK0530AB	50Hz	220V	198V	242V	16.5	25	90	0.8

Remark:
MCA: Max. Current Amps. (A)
MFA: Max. Fuse Amps. (A)
W: Fan Motor Rated Output (W)
FLA: Full Load Amps. (A)
OFM:Outdoor Fan Motor

Capacity Tables

Models	2MCW0509G1/2TTK0509G1 2MWW0509G1/2TWK0509G1

SUMMER		OUTDOOR TEMPERATURE DRY					
Indoor conditions		25℃	30℃	35℃	40℃	45℃	50℃
21℃ D 15℃ W	Total Capacity (Btu/h)	8316	7945	7405	6764	6208	5820
	Sensible Capacity (Btu/h)	6123	5972	5719	5401	5132	4926
	Input (W)	716	790	822	878	943	985
24℃ D 17℃ W	Total Capacity (Btu/h)	8934	8586	8104	7591	7088	6710
	Sensible Capacity (Btu/h)	6521	6346	6123	5901	5769	5685
	Input (W)	726	794	830	901	973	1081
27℃ D 19℃ W	Total Capacity (Btu/h)	9582	9396	**8900**	8198	7439	6866
	Sensible Capacity (Btu/h)	7078	6920	6656	6376	5988	5786
	Input (W)	743	799	**840**	918	984	1051
32℃ D 23℃ W	Total Capacity (Btu/h)	9666	9608	9615	9413	8998	8502
	Sensible Capacity (Btu/h)	6687	6680	6700	6613	6538	6538
	Input (W)	739	804	860	922	1009	1082

WINTER		OUTDOOR TEMPERATURE DRY					
Indoor conditions		12℃ D 11℃ W	7℃ D 6℃ W	4℃ D 3℃ W	0℃ D -1℃ W	-4℃ D -6℃ W	-7℃ D -8℃ W
15℃	Total Capacity (Btu/h)	9893	9538	8627	5999	5067	4862
	Input (W)	1022	868	784	679	625	665
18℃	Total Capacity (Btu/h)	9845	9162	8275	5631	5221	4692
	Input (W)	985	865	795	711	699	721
20℃	Total Capacity (Btu/h)	9811	**9200**	8197	5136	4777	4726
	Input (W)	980	**890**	810	710	685	715
22℃	Total Capacity (Btu/h)	9333	9043	8040	4948	5033	4675
	Input (W)	932	866	811	712	689	735

Models	2MCW0509GB/2TTK0509GB 2MWW0509GB/2TWK0509GB

SUMMER		OUTDOOR TEMPERATURE DRY					
Indoor conditions		25℃	30℃	35℃	40℃	45℃	50℃
21℃ D 15℃ W	Total Capacity (Btu/h)	8503	8124	7572	6916	6347	5951
	Sensible Capacity (Btu/h)	6261	6106	5847	5523	5247	5036
	Input (W)	784	865	900	962	1033	1079
24℃ D 17℃ W	Total Capacity (Btu/h)	9134	8779	8286	7762	7248	6861
	Sensible Capacity (Btu/h)	6668	6489	6261	6033	5899	5813
	Input (W)	795	870	909	987	1066	1184
27℃ D 19℃ W	Total Capacity (Btu/h)	9797	9607	**9100**	8382	7606	7020
	Sensible Capacity (Btu/h)	7237	7075	6806	6520	6123	5916
	Input (W)	813	875	**920**	1005	1078	1151
32℃ D 23℃ W	Total Capacity (Btu/h)	9883	9824	9831	9624	9200	8693
	Sensible Capacity (Btu/h)	6837	6830	6851	6761	6685	6685
	Input (W)	809	881	942	1010	1105	1185

WINTER		OUTDOOR TEMPERATURE DRY					
Indoor conditions		12℃ D	7℃ D	4℃ D	0℃ D	-4℃ D	-7℃ D
		11℃ W	6℃ W	3℃ W	-1℃ W	-6℃ W	-8℃ W
15℃	Total Capacity (Btu/h)	10753	10367	9377	6521	5508	5286
	Input (W)	1045	888	802	694	639	680
18℃	Total Capacity (Btu/h)	10701	9959	8995	6120	5675	5100
	Input (W)	1007	884	813	727	715	737
20℃	Total Capacity (Btu/h)	10664	**10000**	8909	5582	5193	5137
	Input (W)	1002	**910**	828	726	700	731
22℃	Total Capacity (Btu/h)	10145	9829	8739	5378	5471	5082
	Input (W)	953	885	829	728	704	752

Models	2MCW0512G1/2TTK0512G1 2MWW0512G1/2TWK0512G1

SUMMER		OUTDOOR TEMPERATURE DRY					
Indoor conditions		25℃	30℃	35℃	40℃	45℃	50℃
21℃ D 15℃ W	Total Capacity (Btu/h)	10888	10584	10079	9202	8387	7592
	Sensible Capacity (Btu/h)	7957	7800	7489	6892	6333	5777
	Input (W)	954	1079	1109	1200	1127	1375
24℃ D 17℃ W	Total Capacity (Btu/h)	11922	11591	11041	10079	9185	8312
	Sensible Capacity (Btu/h)	8714	8544	8202	7551	6933	6326
	Input (W)	971	1099	1129	1222	1147	1400
27℃ D 19℃ W	Total Capacity (Btu/h)	12959	12601	12000	10956	9984	9035
	Sensible Capacity (Btu/h)	9475	9287	8916	8206	7537	6875
	Input (W)	989	1065	1150	1244	1168	1426
32℃ D 23℃ W	Total Capacity (Btu/h)	13348	13167	12959	11833	10782	9758
	Sensible Capacity (Btu/h)	9758	9704	9629	8861	8141	7428
	Input (W)	1029	1130	1196	1294	1215	1483

WINTER		OUTDOOR TEMPERATURE DRY					
Indoor conditions		12℃ D 11℃ W	7℃ D 6℃ W	4℃ D 3℃ W	0℃ D -1℃ W	-4℃ D -6℃ W	-7℃ D -8℃ W
15℃	Total Capacity (Btu/h)	13846	13126	11943	10501	9581	8794
	Input (W)	1185	1129	1073	970	892	824
18℃	Total Capacity (Btu/h)	13450	12750	11604	10201	9308	8541
	Input (W)	1234	1176	1118	1011	929	859
20℃	Total Capacity (Btu/h)	13186	12500	11374	10001	9124	8374
	Input (W)	2465	1200	1141	1032	949	877
22℃	Total Capacity (Btu/h)	12660	12000	10920	9601	8761	8041
	Input (W)	1247	1189	1129	1022	938	867

Models	2MCW0512GB/2TTK0512GB 2MWW0512GB/2TWK0512GB

SUMMER		OUTDOOR TEMPERATURE DRY					
Indoor conditions		25℃	30℃	35℃	40℃	45℃	50℃
21℃ D 15℃ W	Total Capacity (Btu/h)	10888	10584	10079	9202	8387	7592
	Sensible Capacity (Btu/h)	7957	7800	7489	6892	6333	5777
	Input (W)	971	1098	1128	1221	1147	1399
24℃ D 17℃ W	Total Capacity (Btu/h)	11922	11591	11041	10079	9185	8312
	Sensible Capacity (Btu/h)	8714	8544	8202	7551	6933	6326
	Input (W)	988	1118	1149	1243	1167	1424
27℃ D 19℃ W	Total Capacity (Btu/h)	12959	12601	12000	10956	9984	9035
	Sensible Capacity (Btu/h)	9475	9287	8916	8206	7537	6875
	Input (W)	1006	1084	1170	1266	1188	1451
32℃ D 23℃ W	Total Capacity (Btu/h)	13348	13167	12959	11833	10782	9758
	Sensible Capacity (Btu/h)	9758	9704	9629	8861	8141	7428
	Input (W)	1047	1150	1217	1317	1236	1509

WINTER		OUTDOOR TEMPERATURE DRY					
Indoor conditions		12℃ D	7℃ D	4℃ D	0℃ D	-4℃ D	-7℃ D
		11℃ W	6℃ W	3℃ W	-1℃ W	-6℃ W	-8℃ W
15℃	Total Capacity (Btu/h)	14622	13862	12612	11089	10117	9287
	Input (W)	1185	1129	1073	970	892	824
18℃	Total Capacity (Btu/h)	14203	13464	12253	10772	9829	9019
	Input (W)	1234	1176	1118	1011	929	859
20℃	Total Capacity (Btu/h)	13925	13200	12011	10561	9635	8843
	Input (W)	2465	1200	1141	1032	949	877
22℃	Total Capacity (Btu/h)	13369	12672	11532	10138	9252	8491
	Input (W)	1247	1189	1129	1022	938	867

Models	2MCW0512G9/2TTK0512G9 2MWW0512G9/2TWK0512G9

SUMMER		OUTDOOR TEMPERATURE DRY					
Indoor conditions		25℃	30℃	35℃	40℃	45℃	50℃
21℃ D 15℃ W	Total Capacity (Btu/h)	10706	10408	9911	9049	8247	7465
	Sensible Capacity (Btu/h)	7824	7670	7365	6777	6227	5680
	Input (W)	1029	1163	1196	1294	1215	1483
24℃ D 17℃ W	Total Capacity (Btu/h)	11723	11397	10857	9911	9032	8173
	Sensible Capacity (Btu/h)	8569	8401	8066	7425	6818	6220
	Input (W)	1047	1185	1217	1318	1237	1510
27℃ D 19℃ W	Total Capacity (Btu/h)	12743	12391	11800	10773	9817	8884
	Sensible Capacity (Btu/h)	9317	9133	8767	8069	7411	6761
	Input (W)	1066	1148	1240	1341	1259	1538
32℃ D 23℃ W	Total Capacity (Btu/h)	13125	12947	12743	11636	10602	9596
	Sensible Capacity (Btu/h)	9596	9542	9468	8713	8005	7304
	Input (W)	1110	1218	1290	1395	1310	1599

WINTER		OUTDOOR TEMPERATURE DRY					
Indoor conditions		12℃ D 11℃ W	7℃ D 6℃ W	4℃ D 3℃ W	0℃ D -1℃ W	-4℃ D -6℃ W	-7℃ D -8℃ W
15℃	Total Capacity (Btu/h)	14179	13442	12230	10753	9811	9005
	Input (W)	1324	1261	1198	1084	996	921
18℃	Total Capacity (Btu/h)	13773	13056	11882	10445	9531	8746
	Input (W)	1378	1313	1248	1129	1037	959
20℃	Total Capacity (Btu/h)	13503	12800	11647	10241	9343	8575
	Input (W)	2752	1340	1274	1152	1059	979
22℃	Total Capacity (Btu/h)	12964	12288	11183	9831	8971	8234
	Input (W)	1392	1327	1261	1141	1048	968

Models	2MCW0518G1/2TTK0518G1 2MWW0518G1/2TWK0518G1

SUMMER		OUTDOOR TEMPERATURE DRY					
Indoor conditions		25℃	30℃	35℃	40℃	45℃	50℃
21℃ D 15℃ W	Total Capacity (Btu/h)	16485	16028	15263	13936	12701	11493
	Sensible Capacity (Btu/h)	11902	11667	11203	10312	9473	8643
	Input (W)	1377	1557	1601	1732	1626	1985
24℃ D 17℃ W	Total Capacity (Btu/h)	18386	17543	16707	15253	13898	12581
	Sensible Capacity (Btu/h)	13028	12772	12264	11288	10370	9459
	Input (W)	1402	1586	1630	1764	1656	2022
27℃ D 19℃ W	Total Capacity (Btu/h)	19440	18901	18000	16434	14977	13554
	Sensible Capacity (Btu/h)	14035	13758	13213	12162	11172	10193
	Input (W)	1428	1537	1660	1796	1686	2058
32℃ D 23℃ W	Total Capacity (Btu/h)	20010	19836	19491	17823	16243	14700
	Sensible Capacity (Btu/h)	14448	14441	14328	13189	12117	11056
	Input (W)	1485	1631	1726	1868	1754	2141

WINTER		OUTDOOR TEMPERATURE DRY					
Indoor conditions		12℃ D 11℃ W	7℃ D 6℃ W	4℃ D 3℃ W	0℃ D -1℃ W	-4℃ D -6℃ W	-7℃ D -8℃ W
15℃	Total Capacity (Btu/h)	20716	19636	17869	15709	14335	13157
	Input (W)	1838	1750	1663	1505	1382	1277
18℃	Total Capacity (Btu/h)	20123	19073	17358	15258	13923	12781
	Input (W)	1913	1823	1732	1567	1440	1331
20℃	Total Capacity (Btu/h)	19727	18700	17018	14960	13651	12529
	Input (W)	2631	1860	1768	1599	1469	1358
22℃	Total Capacity (Btu/h)	18939	17951	16338	14361	13105	12028
	Input (W)	1934	1841	1750	1584	1455	1344

Models	2MCW0518GB/2TTK0518GB 2MWW0518GB/2TWK0518GB

SUMMER		OUTDOOR TEMPERATURE DRY					
Indoor conditions		25℃	30℃	35℃	40℃	45℃	50℃
21℃ D 15℃ W	Total Capacity (Btu/h)	16577	16117	15348	14013	12771	11557
	Sensible Capacity (Btu/h)	11968	11732	11265	10369	9525	8691
	Input (W)	1410	1595	1640	1774	1666	2033
24℃ D 17℃ W	Total Capacity (Btu/h)	18488	17640	16800	15338	13976	12651
	Sensible Capacity (Btu/h)	13101	12843	12332	11351	10428	9512
	Input (W)	1436	1624	1670	1806	1696	2070
27℃ D 19℃ W	Total Capacity (Btu/h)	19548	19006	18100	16525	15060	13629
	Sensible Capacity (Btu/h)	14113	13835	13286	12229	11234	10249
	Input (W)	1462	1574	1700	1840	1727	2108
32℃ D 23℃ W	Total Capacity (Btu/h)	20121	19946	19599	17922	16333	14782
	Sensible Capacity (Btu/h)	14528	14521	14408	13262	12184	11117
	Input (W)	1521	1671	1768	1913	1796	2192

WINTER		OUTDOOR TEMPERATURE DRY					
Indoor conditions		12℃ D 11℃ W	7℃ D 6℃ W	4℃ D 3℃ W	0℃ D -1℃ W	-4℃ D -6℃ W	-7℃ D -8℃ W
15℃	Total Capacity (Btu/h)	21546	20423	18586	16339	14910	13685
	Input (W)	1729	1646	1565	1416	1300	1202
18℃	Total Capacity (Btu/h)	20930	19838	18055	15870	14481	13293
	Input (W)	1800	1715	1629	1474	1355	1252
20℃	Total Capacity (Btu/h)	20519	19450	17701	15560	14199	13031
	Input (W)	2475	1750	1663	1505	1382	1277
22℃	Total Capacity (Btu/h)	19698	18671	16993	14937	13630	12511
	Input (W)	1819	1732	1646	1490	1369	1265

Models	2MCW0524G1/2TTK0524G1 2MWW0524G1/2TWK0524G1

SUMMER		OUTDOOR TEMPERATURE DRY					
Indoor conditions		25℃	30℃	35℃	40℃	45℃	50℃
21℃ D 15℃ W	Total Capacity (Btu/h)	19926	19369	18448	16845	15350	13890
	Sensible Capacity (Btu/h)	14385	14101	13542	12464	11450	10447
	Input (W)	1866	2111	2170	2348	2204	2690
24℃ D 17℃ W	Total Capacity (Btu/h)	21911	21301	20287	18523	16810	15275
	Sensible Capacity (Btu/h)	15818	15507	14890	13706	12593	11488
	Input (W)	1900	2150	2210	2391	2245	2740
27℃ D 19℃ W	Total Capacity (Btu/h)	23767	23109	22000	20093	18308	16572
	Sensible Capacity (Btu/h)	17158	16821	16152	14869	13658	12460
	Input (W)	1935	2084	2250	2435	2286	2790
32℃ D 23℃ W	Total Capacity (Btu/h)	24480	24146	23767	21700	19775	17895
	Sensible Capacity (Btu/h)	17674	17578	17445	16056	14753	13460
	Input (W)	2012	2211	2340	2532	2377	2902

WINTER		OUTDOOR TEMPERATURE DRY					
Indoor conditions		12℃ D 11℃ W	7℃ D 6℃ W	4℃ D 3℃ W	0℃ D -1℃ W	-4℃ D -6℃ W	-7℃ D -8℃ W
15℃	Total Capacity (Btu/h)	26587	24860	22932	20160	18396	16884
	Input (W)	2391	2277	2163	1958	1798	1662
18℃	Total Capacity (Btu/h)	25826	24481	22276	19584	17870	16403
	Input (W)	2490	2372	2253	2039	1874	1732
20℃	Total Capacity (Btu/h)	25321	24000	21840	19201	17519	16078
	Input (W)	2540	2420	2300	2081	1912	1767
22℃	Total Capacity (Btu/h)	24307	23041	20966	18433	16819	15437
	Input (W)	2516	2396	2276	2061	1893	1749

Models	2MCW0524GB/2TTK0524GB 2MWW0524GB/2TWK0524GB

SUMMER		OUTDOOR TEMPERATURE DRY					
Indoor conditions		25℃	30℃	35℃	40℃	45℃	50℃
21℃ D 15℃ W	Total Capacity (Btu/h)	19790	19237	18322	16730	15246	13795
	Sensible Capacity (Btu/h)	14287	14005	13450	12379	11372	10376
	Input (W)	1825	2064	2122	2296	2155	2630
24℃ D 17℃ W	Total Capacity (Btu/h)	21762	21155	20149	18397	16696	15171
	Sensible Capacity (Btu/h)	15710	15401	14788	13612	12507	11410
	Input (W)	1858	2102	2161	2338	2195	2679
27℃ D 19℃ W	Total Capacity (Btu/h)	23605	22951	21850	19956	18183	16459
	Sensible Capacity (Btu/h)	17042	16706	16042	14768	13565	12375
	Input (W)	1892	2038	2200	2381	2235	2728
32℃ D 23℃ W	Total Capacity (Btu/h)	24314	23981	23605	21552	19641	17773
	Sensible Capacity (Btu/h)	17553	17458	17326	15947	14653	13368
	Input (W)	1967	2162	2288	2476	2324	2838

WINTER		OUTDOOR TEMPERATURE DRY					
Indoor conditions		12℃ D	7℃ D	4℃ D	0℃ D	-4℃ D	-7℃ D
		11℃ W	6℃ W	3℃ W	-1℃ W	-6℃ W	-8℃ W
15℃	Total Capacity (Btu/h)	26454	24736	22817	20060	18304	16800
	Input (W)	2272	2164	2056	1860	1709	1579
18℃	Total Capacity (Btu/h)	25697	24359	22165	19486	17781	16321
	Input (W)	2366	2254	2142	1938	1781	1646
20℃	Total Capacity (Btu/h)	25194	23880	21730	19105	17431	15998
	Input (W)	2414	2300	2186	1978	1818	1680
22℃	Total Capacity (Btu/h)	24186	22926	20861	18341	16735	15360
	Input (W)	2391	2278	2163	1959	1799	1662

Models	2MCW0530G1/2TTK0530G1 2MWW0530G1/2TWK0530G1

SUMMER		OUTDOOR TEMPERATURE DRY					
Indoor conditions		25℃	30℃	35℃	40℃	45℃	50℃
21℃ D 15℃ W	Total Capacity (Btu/h)	23576	22913	22032	21260	20271	19387
	Sensible Capacity (Btu/h)	16867	16493	16082	15708	15337	14963
	Input (W)	2452	2555	2689	2781	2900	2995
24℃ D 17℃ W	Total Capacity (Btu/h)	26020	25289	24317	23467	22372	21400
	Sensible Capacity (Btu/h)	18839	18394	17993	17558	17211	16837
	Input (W)	2579	2702	2767	2857	2983	3084
27℃ D 19℃ W	Total Capacity (Btu/h)	29104	28288	27200	26248	25024	23936
	Sensible Capacity (Btu/h)	21593	20808	20400	19972	19604	19149
	Input (W)	2637	2715	2820	2932	3052	3213
32℃ D 23℃ W	Total Capacity (Btu/h)	31433	30552	29376	28349	27027	25850
	Sensible Capacity (Btu/h)	21461	21264	20849	20437	20050	19536
	Input (W)	2616	2747	2880	2989	3145	3269

WINTER		OUTDOOR TEMPERATURE DRY					
Indoor conditions		12℃ D 11℃ W	7℃ D 6℃ W	4℃ D 3℃ W	0℃ D -1℃ W	-4℃ D -6℃ W	-7℃ D -8℃ W
15℃	Total Capacity (Btu/h)	34019	31500	28193	26744	24569	21419
	Input (W)	3165	3014	2743	2442	2230	2020
18℃	Total Capacity (Btu/h)	33048	30600	27389	25981	23867	20809
	Input (W)	3231	3077	2800	2492	2278	2062
20℃	Total Capacity (Btu/h)	32400	30000	26850	25469	23400	20400
	Input (W)	3297	3140	2857	2543	2324	2104
22℃	Total Capacity (Btu/h)	31105	28800	25776	24450	22463	19585
	Input (W)	3265	3109	2829	2518	2301	2083

Models	2MCW0530GB/2TTK0530GB 2MWW0530GB/2TWK0530GB

SUMMER		OUTDOOR TEMPERATURE DRY					
Indoor conditions		25℃	30℃	35℃	40℃	45℃	50℃
21℃ D 15℃ W	Total Capacity (Btu/h)	23662	22997	22113	21338	20345	19458
	Sensible Capacity (Btu/h)	16929	16554	16141	15766	15394	15018
	Input (W)	2407	2508	2639	2730	2847	2939
24℃ D 17℃ W	Total Capacity (Btu/h)	26116	25382	24406	23553	22454	21478
	Sensible Capacity (Btu/h)	18909	18462	18059	17622	17274	16899
	Input (W)	2532	2652	2716	2804	2928	3027
27℃ D 19℃ W	Total Capacity (Btu/h)	29211	28392	27300	26345	25116	24024
	Sensible Capacity (Btu/h)	21673	20885	20475	20045	19676	19219
	Input (W)	2588	2665	2768	2878	2996	3153
32℃ D 23℃ W	Total Capacity (Btu/h)	31549	30665	29484	28453	27126	25945
	Sensible Capacity (Btu/h)	21540	21342	20925	20513	20124	19608
	Input (W)	2568	2697	2827	2934	3087	3209

WINTER		OUTDOOR TEMPERATURE DRY					
Indoor conditions		12℃ D	7℃ D	4℃ D	0℃ D	-4℃ D	-7℃ D
		11℃ W	6℃ W	3℃ W	-1℃ W	-6℃ W	-8℃ W
15℃	Total Capacity (Btu/h)	32092	29715	26596	25229	23177	20206
	Input (W)	2923	2784	2534	2255	2060	1866
18℃	Total Capacity (Btu/h)	31175	28866	25837	24508	22515	19630
	Input (W)	2984	2842	2586	2302	2103	1904
20℃	Total Capacity (Btu/h)	30564	28300	25329	24026	22074	19244
	Input (W)	3045	2900	2639	2349	2146	1943
22℃	Total Capacity (Btu/h)	29342	27168	24315	23065	21190	18475
	Input (W)	3015	2871	2613	2326	2125	1924

Wiring Diagrams

Figure 1. 2MWW0509G1 - 2TWK0509G1

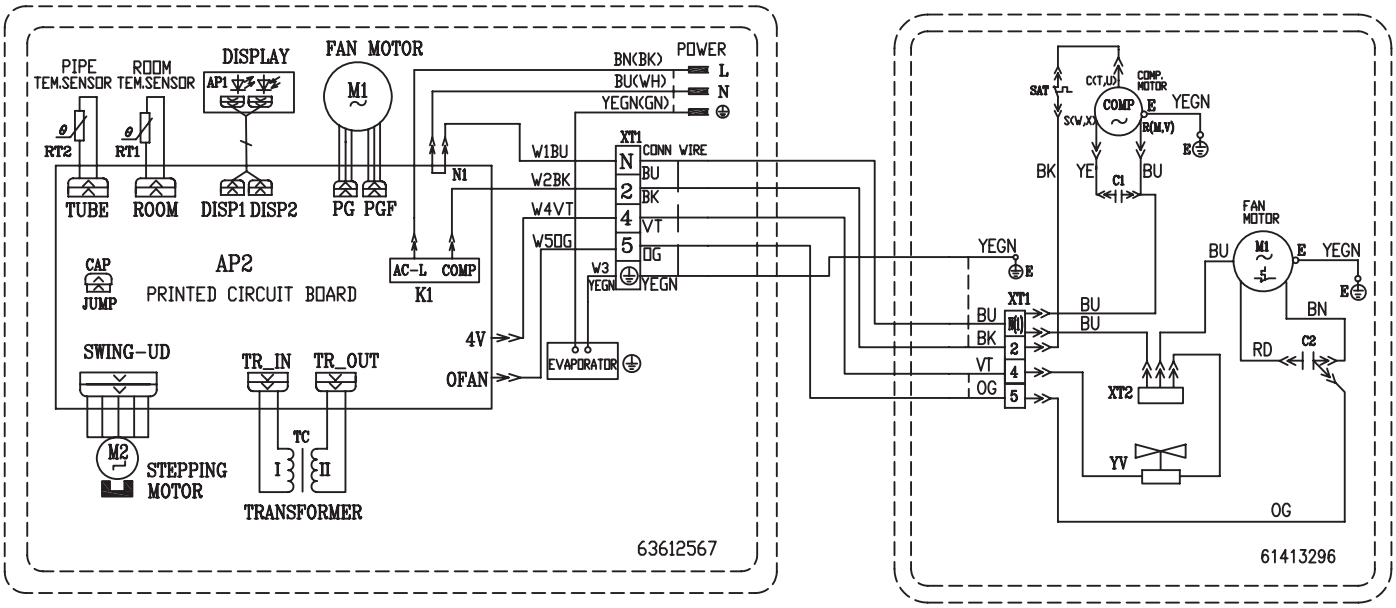

Figure 2. 2MWW0512G1 - 2TWK0512G1

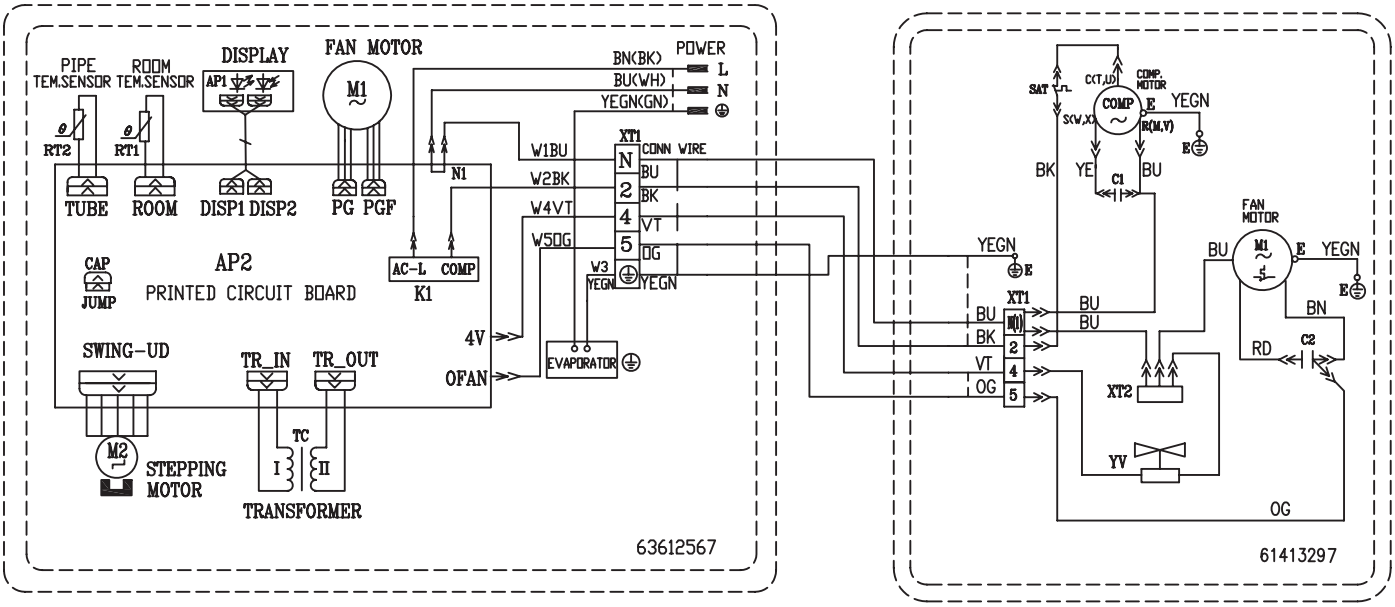

Figure 3. 2MWW0512G9 - 2TWK0512G9

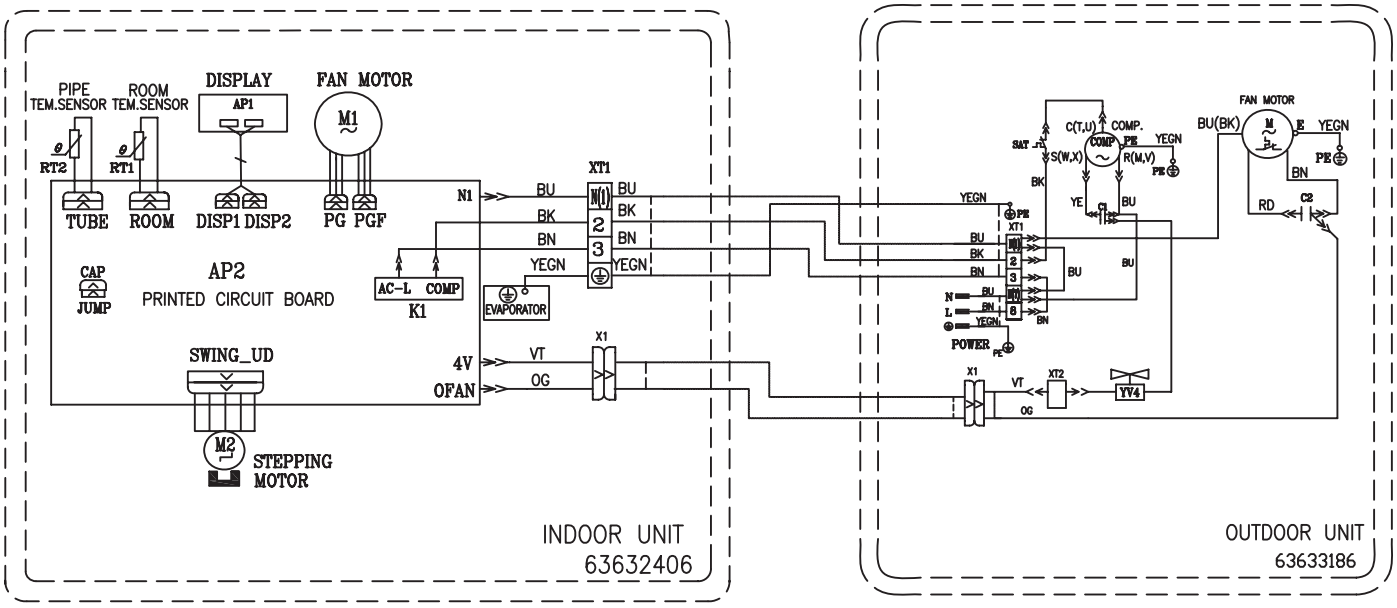

Figure 4. 2MWW0518G1 - 2TWK0518G1

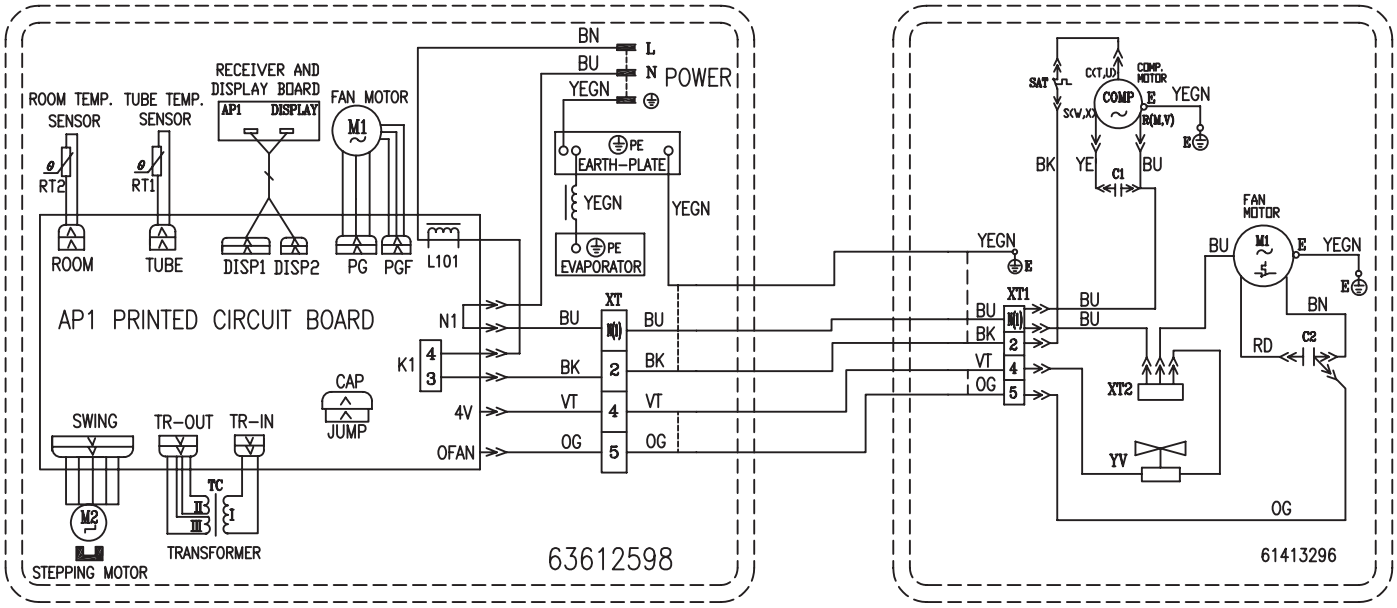

Figure 5. 2MWW0524G1 - 2TWK0524G1

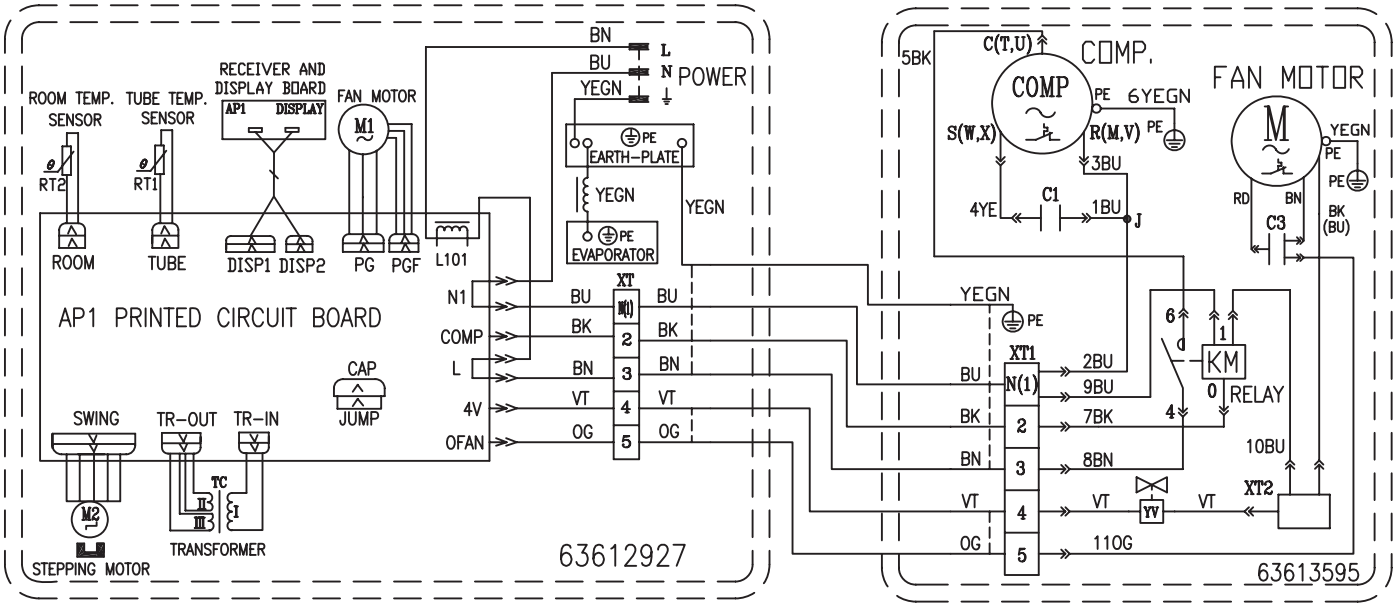

Figure 6. 2MWW0530G1 - 2TWK0530G1

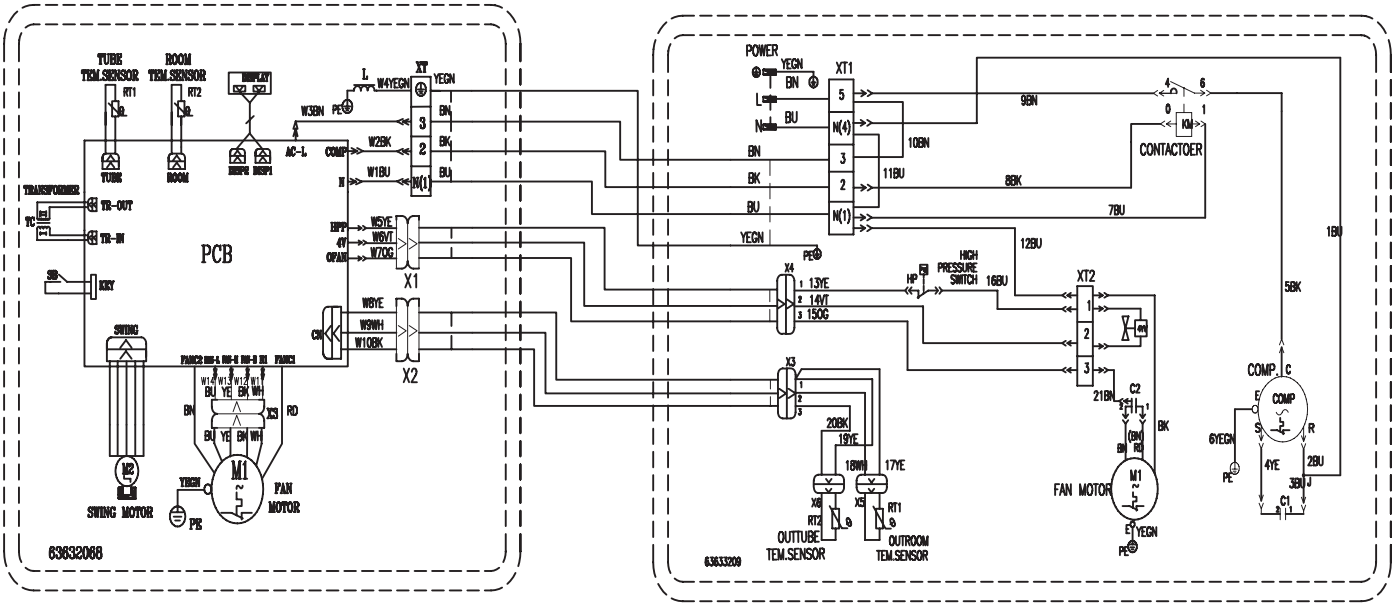

Figure 7. 2MCW0509G1 - 2TTK0509G1

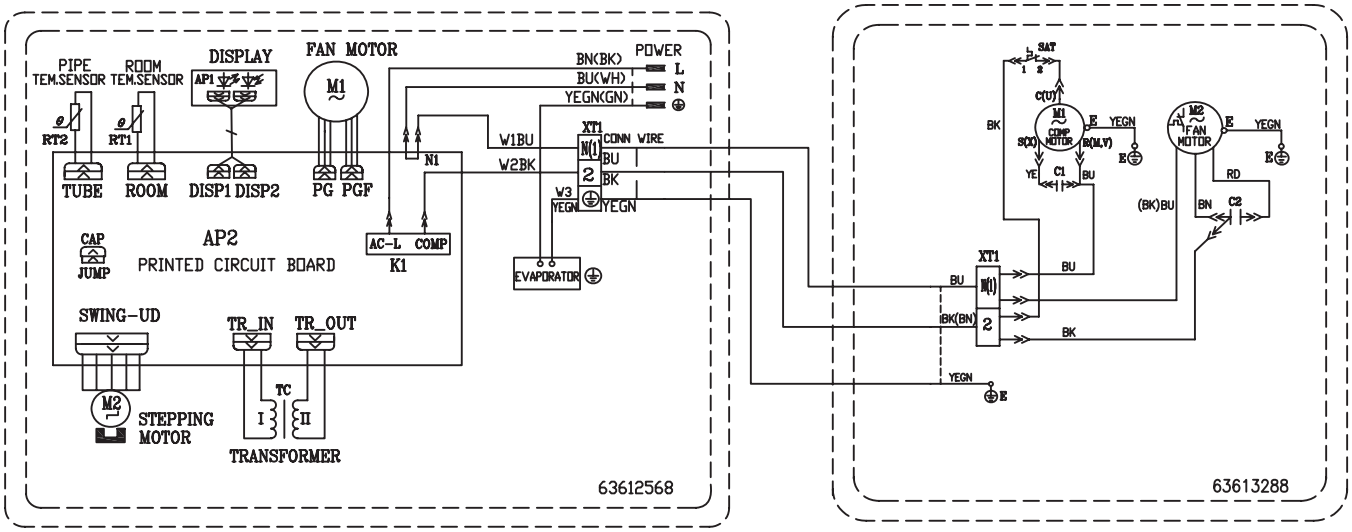

Figure 8. 2MCW0512G1 - 2TTK0512G1

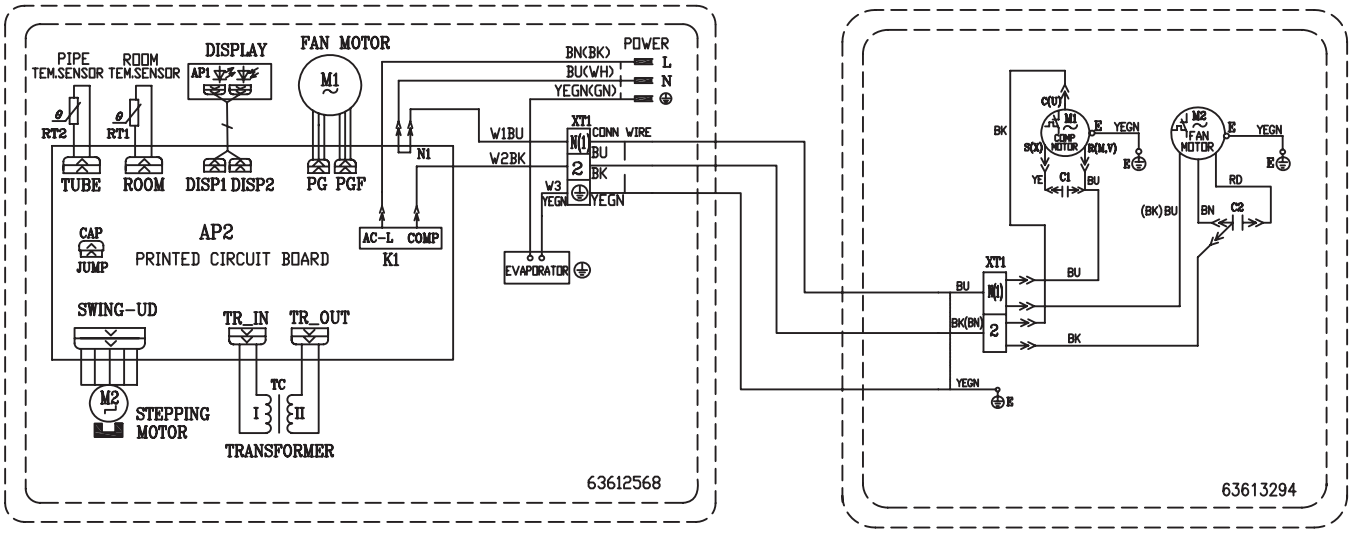

Figure 9. 2MCW0512G9 - 2TTK0512G9

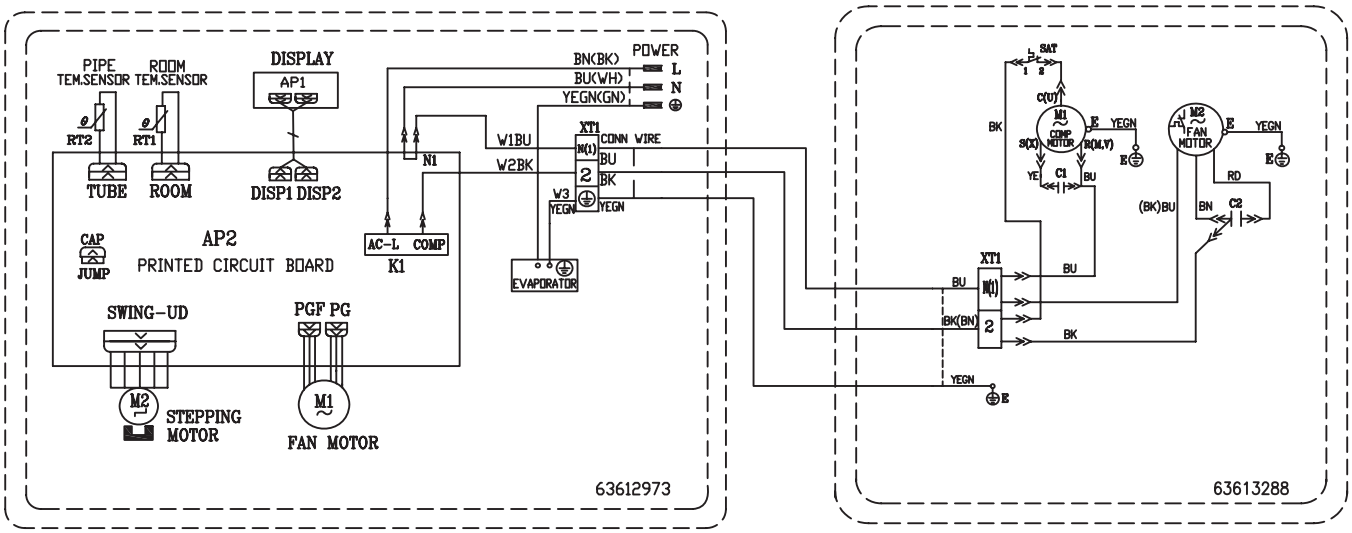

Figure 10. 2MCW0518G1 - 2TTK0518G1

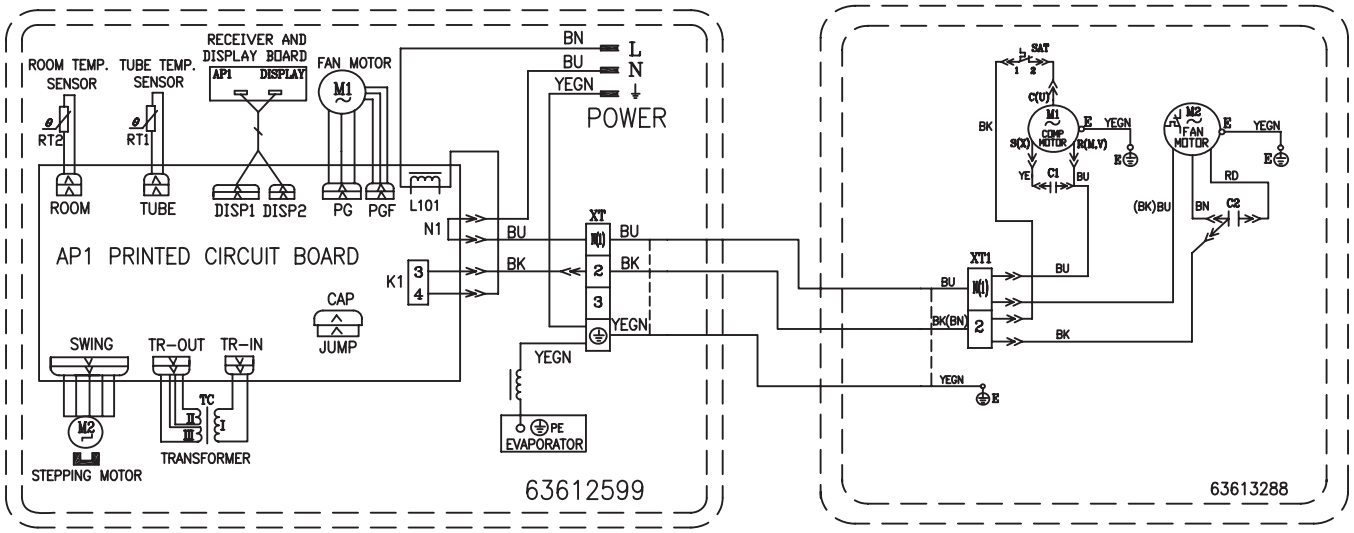

Figure 11. 2MCW0524G1 - 2TTK0524G1

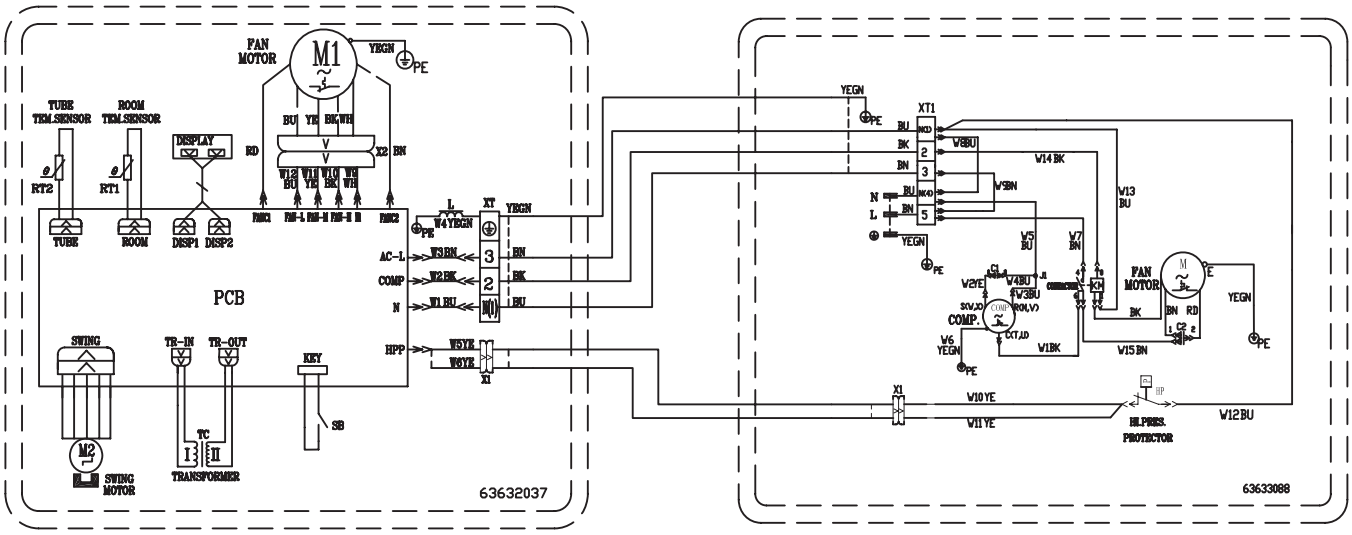

Figure 12. 2MCW0530G1 - 2TTK0530G1

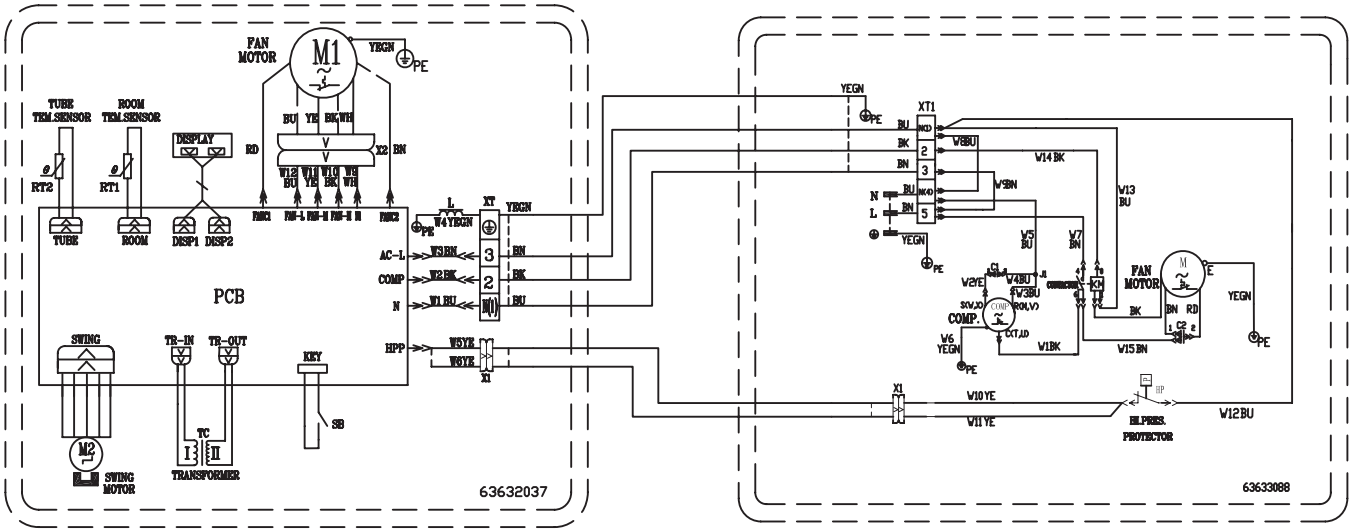

Figure 13. 2MCW0509GB - 2TTK0509GB

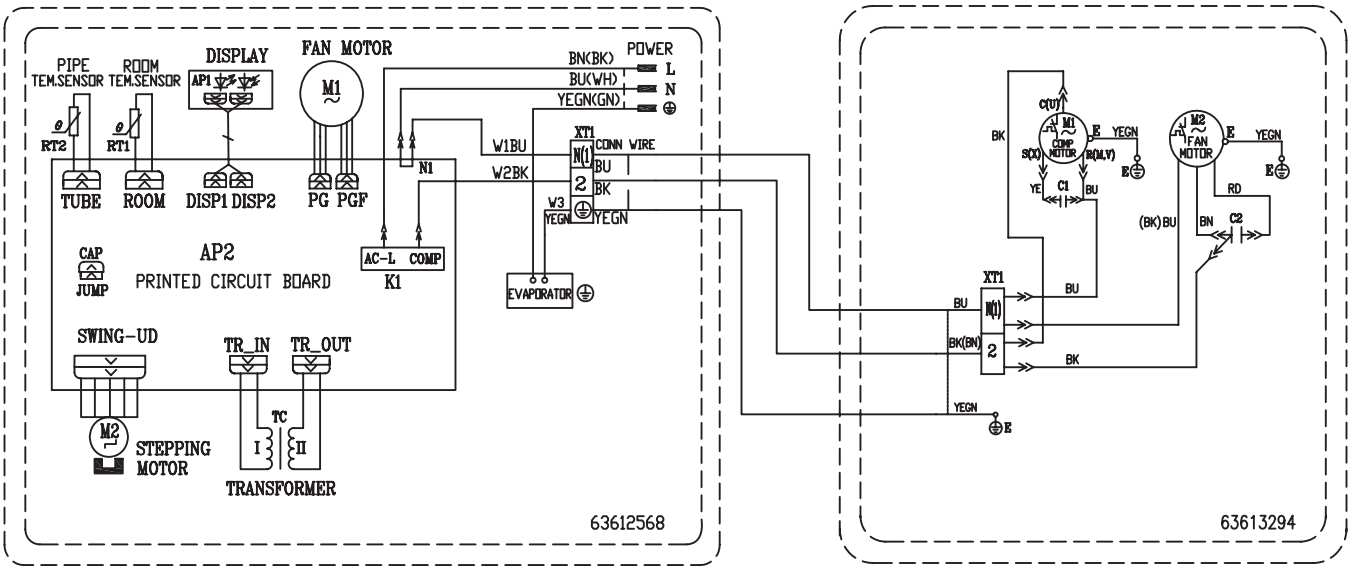

Figure 14. 2MCW0512GB - 2TTK0512GB

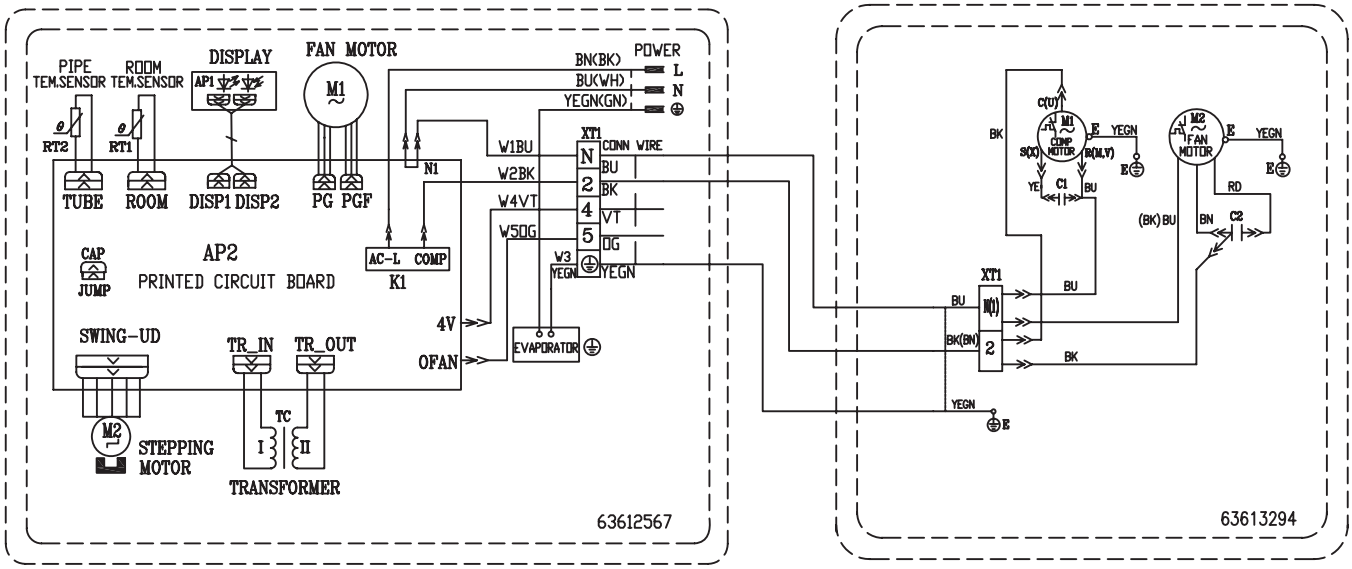

Figure 15. 2MCW0518GB - 2TTK0518GB

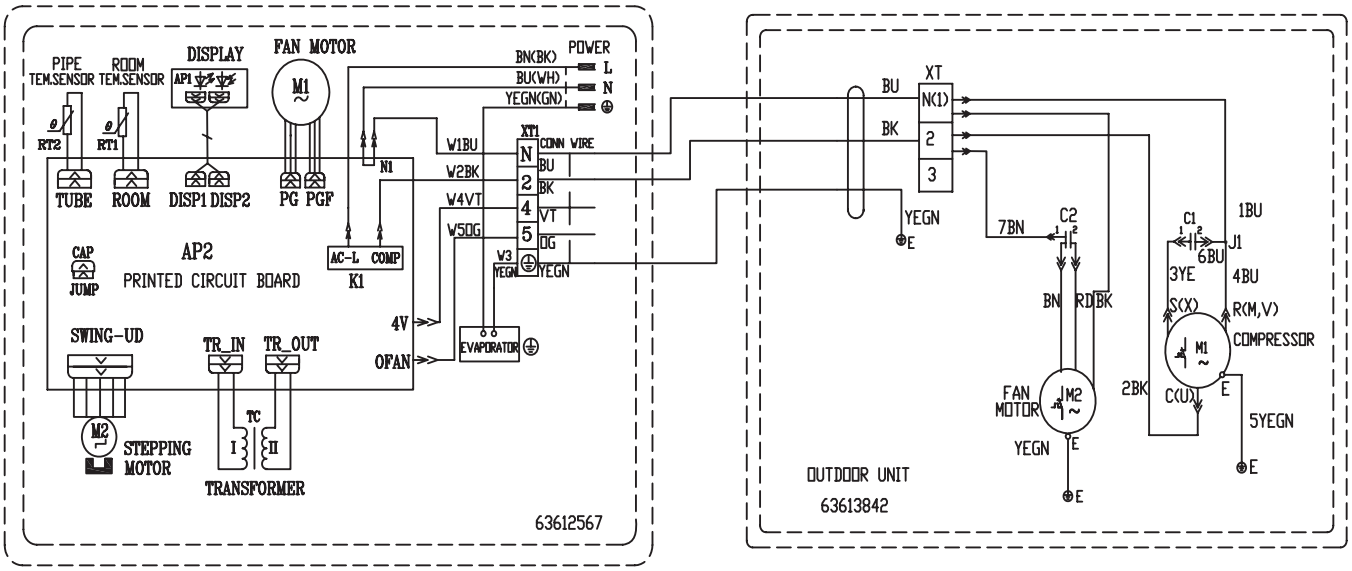

Figure 16. 2MCW0524GB - 2TTK0524GB

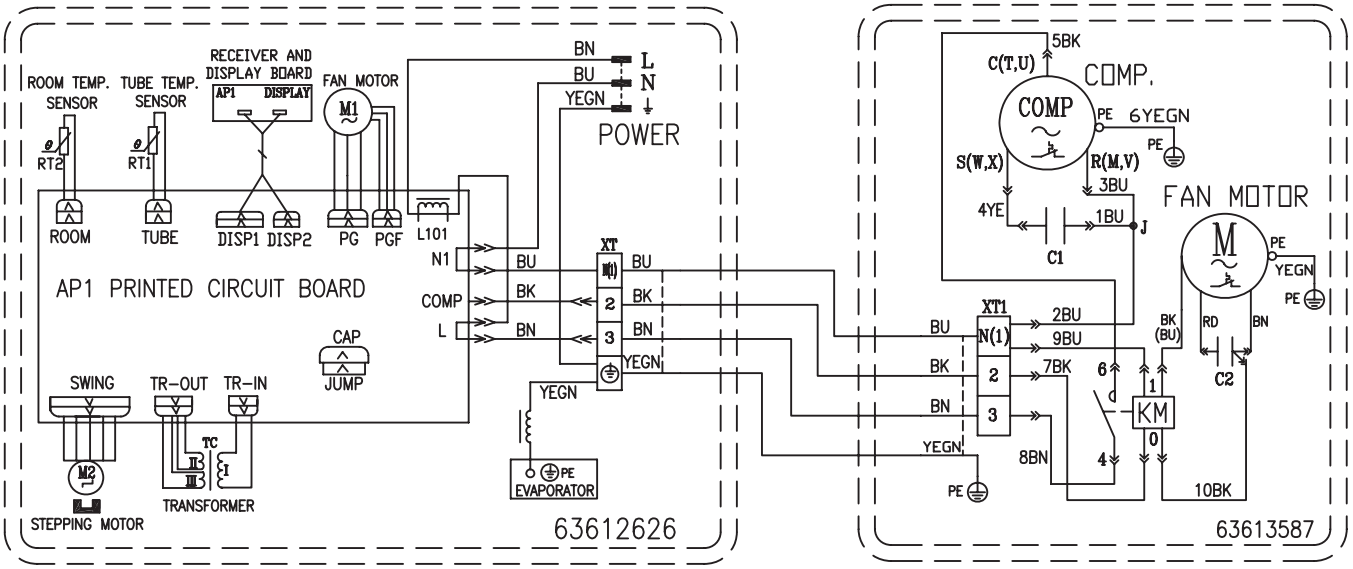

Figure 17. 2MCW0530GB - 2TTK0530GB

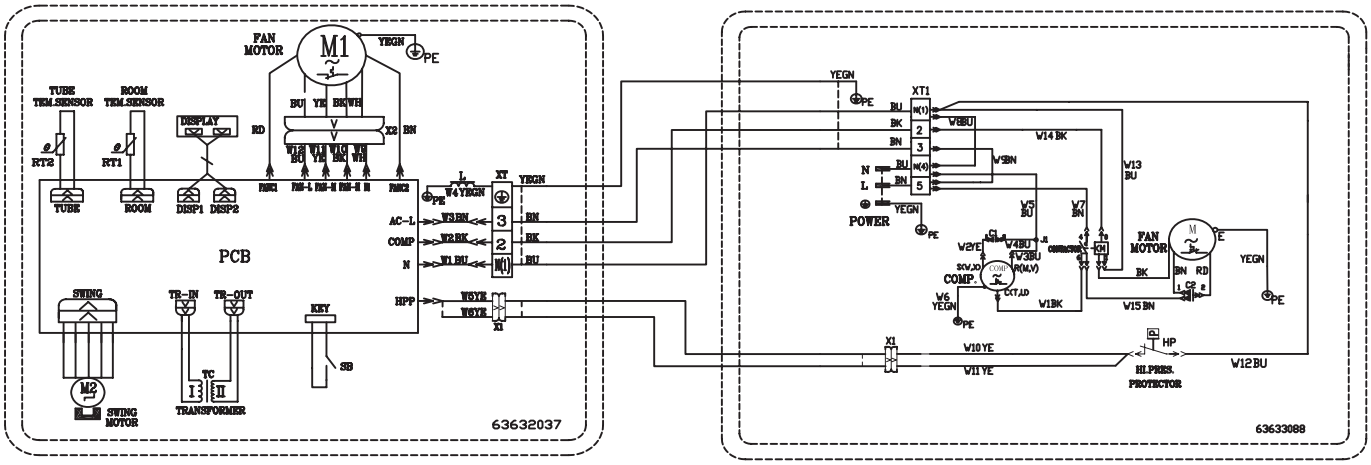

Figure 18. 2MWW0509GB - 2TWK0509GB

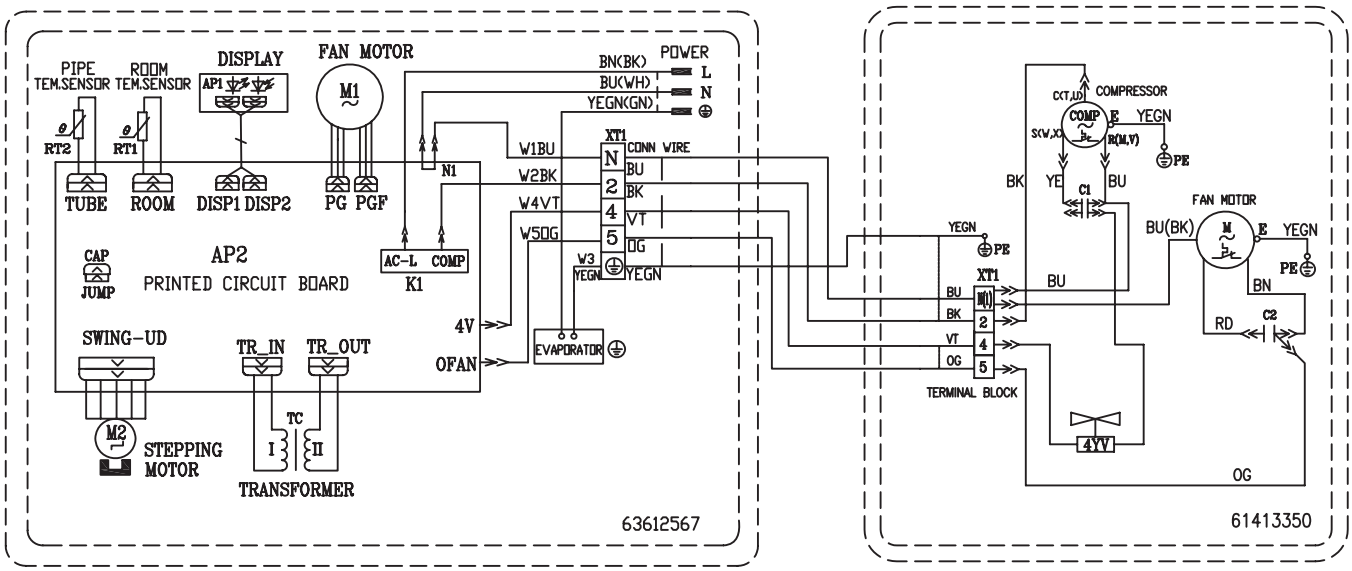

Figure 19. 2MWW0512GB - 2TWK0512GB

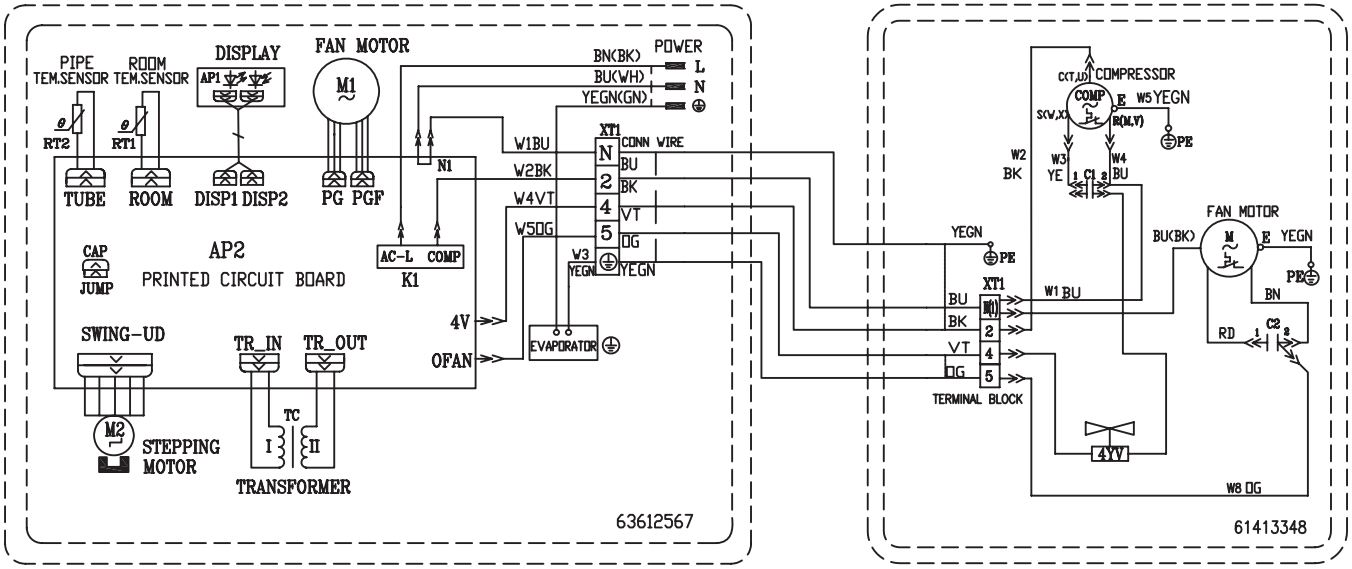

Figure 20. 2MWW0518GB - 2TWK0518GB

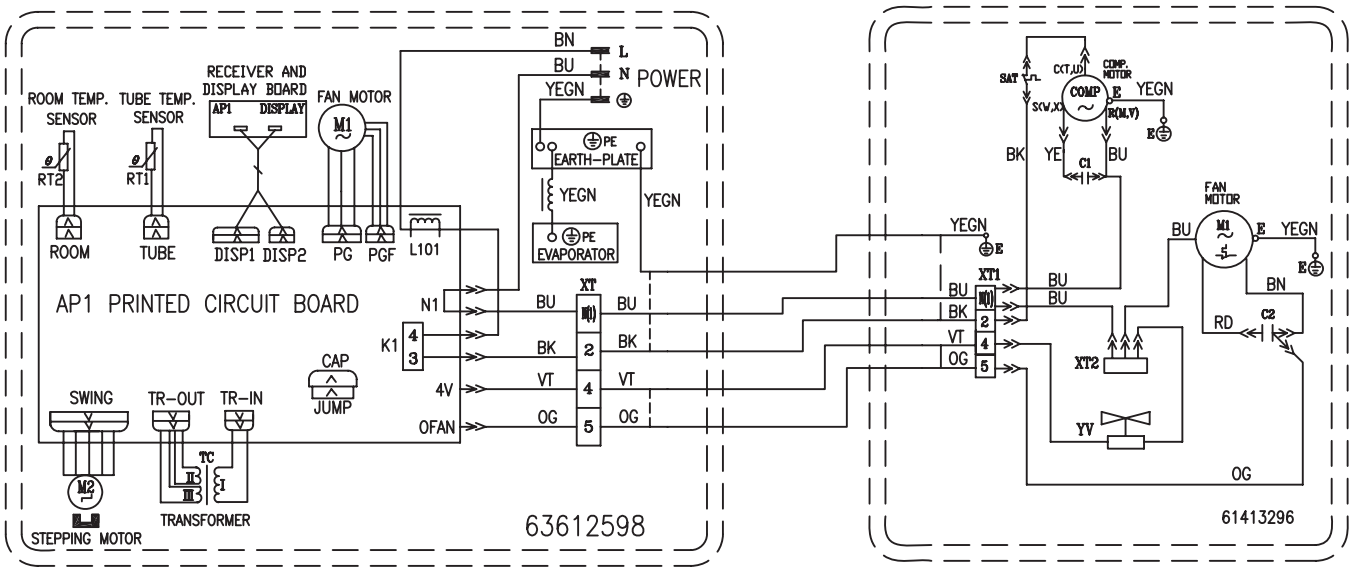

Air Velocity Distribution

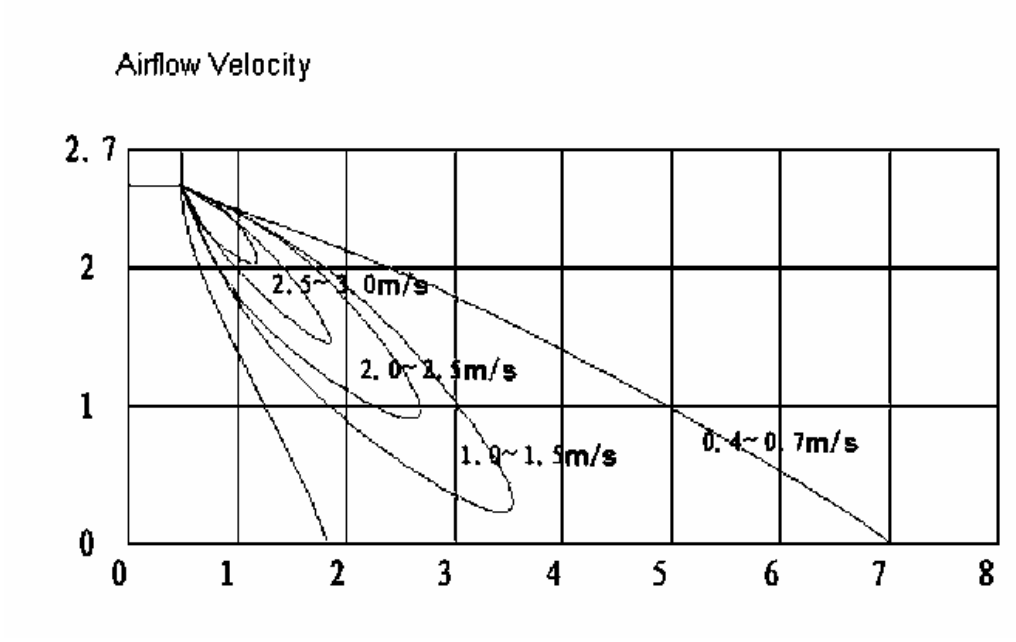

Sound Level

Test condition

■ Wall Mounted Type

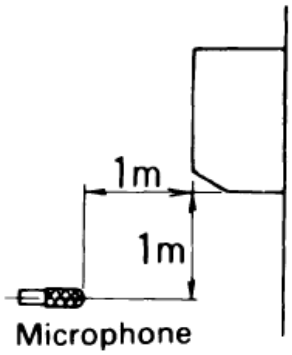

Test value

60Hz Models(Cooling only -Heat pump)

Unit Number	Model		Indoor Sound Pressure level (dB(A))			
	Outdoor	Indoor	SH	H	M	L
1	2TWK0509G1000AA	2MWW0509G1000AA	40	37	33	28
2	2TWK0512G1000AA	2MWW0512G1000AA	41	38	34	29
3	2TWK0512G9000AA	2MWW0512G9000AA	42	39	36	30
4	2TWK0518G1000AA	2MWW0518G1000AA	45	42	39	35
5	2TWK0524G1000AA	2MWW0524G1000AA	49	44	40	37
6	2TWK0530G1000AA	2MWW0530G1000AA	/	51	48	42

50Hz Models(Cooling only -Heat pump)

Unit Number	Model		Indoor Sound Pressure level (dB(A))			
	Outdoor	Indoor	SH	H	M	L
1	2TWK0509GB000AA	2MWW0509GB000AA	40	37	35	32
2	2TWK0512GB000AA	2MWW0512GB000AA	42	39	36	33
3	2TWK0518GB000AA	2MWW0518GB000AA	45	42	36	35
4	2TWK0524GB000AA	2MWW0524GB000AA	49	44	40	37
5	2TWK0530GB000AA	2MWW0530GB000AA	/	51	48	45

Operating Functions

Operation of remote controller

Temperature parameters

- Room set temperature (T set)
- Room ambient temperature (T amb)

Fundamental functions

After powered on, no matter when the compressor is started, the time interval between two startups cannot be less than 3 minutes.

COOL mode

The condition and process of cooling

- If T amb is superior or equal T set, COOL mode will act, the compressor and outdoor fan will run, and the indoor fan will run at the set speed.
- If T amb is inferior or equal T set -2 °C, the compressor will stop, the outdoor fan will delay 30 seconds to stop, and the indoor fan will run at the set speed.
- If T set -2°C < T amb < Tset, the unit will keep running in the previous mode.

In this mode, the reversal valve will not be powered on and the temperature setting range is 16°C~30°C.

The unit will adjust the running frequency of the compressor automatically according to the change of ambient temperature.

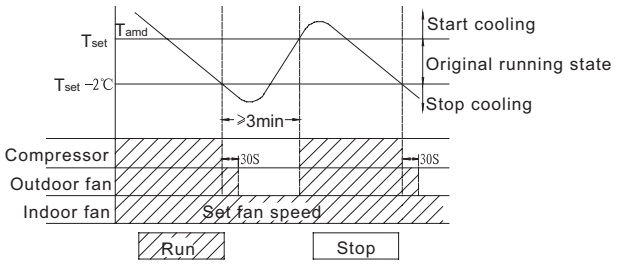

Protection function

- Antifreezing protection

  Under cooling and drying mode, after the compressor run about 10 mins, when the pipe temp.of the evaporator is to low, the compressor will stop, the outdoor fan will stop after 30s, under cooling mode the indoor fan and swing motor will keep running in the original mode, under drying mode the indoor fan will run at low fan speed, the swing motor will run in the original mode. When antifreezing protection is eliminated and the compressor has stopped for 3 minutes, the unit will resume running in the original mode.

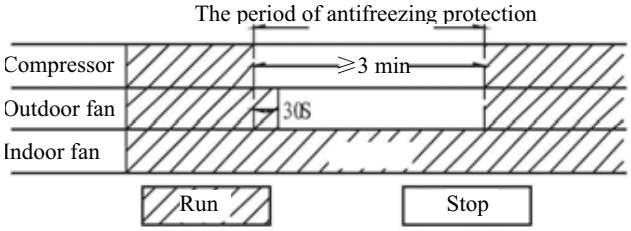

Overcurrent protection

If total current is high, the compressor will run in limited or dropped frequency. When total current goes on rising over the stated value, the compressor will stop, the outdoor fan will delay 30 seconds to stop.

DRY mode

The condition and process of drying

- If T amb > T set, DRY mode will act, the indoor fan, outdoor fan and compressor will run, and indoor fan will run at low speed.
- If T set -2°C inferior or equal T amb inferior or equal T set, the unit will keep running in the original mode.
- If T amb < T set -2°C, the compressor will stop running, the outdoor fan will delay 30 seconds to stop and the indoor fan will run at low speed.

In this mode, the reversal valve will not be powered on and the temperature setting range is 16°C~30°C.

The unit will adjust the running frequency of the compressor automatically according to the change of ambient temperature.

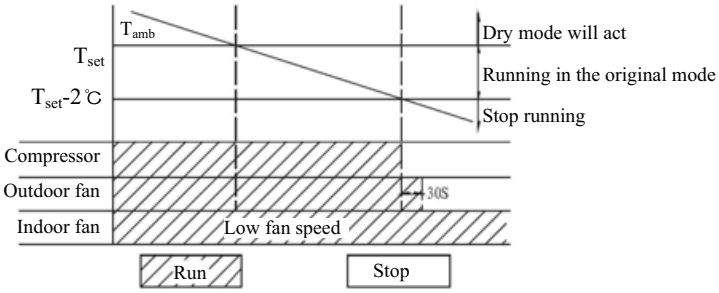

Protection

Protection is the same with that in COOL mode.

HEAT mode

The condition and process of heating

- If T amb inferior or equal T set +2°C, HEAT mode will act, the compressor, outdoor fan and 4-way valve will run simultaneously, the indoor fan will delay at most for 2min to run.
- If T set +2°C < Tamb < Tset +5°C, the unit will keep running in the original mode.
- If T amb superior or equal T set +5°C, the compressor will stop, the outdoor fan will delay 30 sec to stop and the indoor fan will blow for 60 sec at the original speed and then stop.

In this mode, the temperature setting range is 16°C~30°C.

The air conditioner will adjust the running frequency of the compressor automatically according to the change of ambient temperature.

When the unit is turned off in HEAT mode, or switched to other mode from HEAT mode, the four-way valve will be powered off 2min later after the compressor stops.

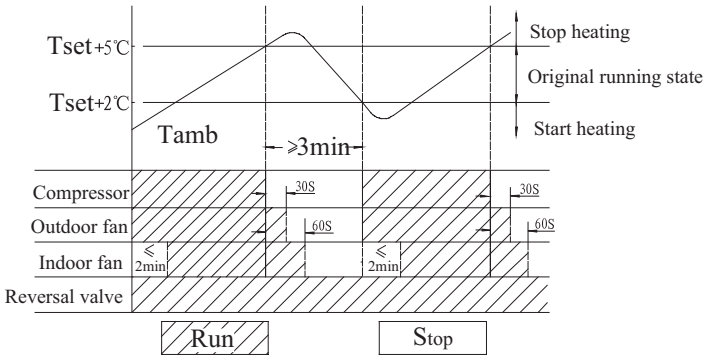

The condition and process of defrosting

When frost is detected in the condenser, the system will enter into defrosting state. When defrosting starts, the compressor and indoor fan will stop, and the outdoor fan and four-way valve will delay 30 seconds to stop. The compressor will start again after 30s and. When the compressor has run for 8mins, the compressor will stop.

After 30 seconds the four-way valve opens and after another 60 seconds, the compressor and outdoor fan resume running. The indoor fan will delay 2 minutes to run at the latest and temperature on the display panel shows H1.

Under heating mode,when the compressor is stopped by malfunction, the indoor fan will blow at low fan speed for 60s and then stop.

Protection

- Overcurrent protection

  If total current is high, the compressor will run in limited or dropped frequency. When total current go on rising over the stated value, the compressor will stop, the outdoor fan will delay 30 seconds to stop.

FAN mode

In this mode, the indoor fan will run the fan in High, Med, Low and Auto mode. The compressor, outdoor fan and four-way valve will stop.

In this mode, the temperature setting range is 16~30℃.

The unit will adjust the running frequency of the compressor automatically according to the change of ambient temperature.

AUTO mode

In this mode, the system selects COOL, HEAT and FAN mode automatically according to the change of ambient temperature. The protection function is the same with that of COOL/HEAT mode.

The unit will adjust the running frequency of the compressor automatically according to the change of ambient temperature.

Other control

ON / OFF

Each time the On/Off button of the remote controller is pressed, the On/Off state will switch once.

MODE selection

Press the MODE button on the remote controller to select and display the following modes: AUTO, COOL, DRY, FAN, and HEAT.

TEMP. setting button

Each time TEMP + or TEMP - button is pressed, the set temperature will be increased or decreased by 1°C.

Adjusting range is 16~30°C . In AUTO mode, this button does not function.

AUTO key

When the unit is stop, press AUTO key, the unit will run under AUTO mode and the swing motor starts.

When the unit is running, press AUTO key, the unit will be stopped.

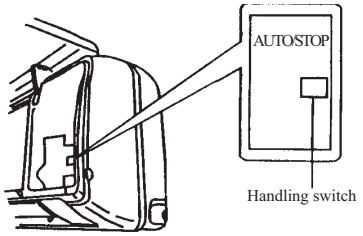

Timer control

The unit is turned on or off according to the timer set by the remote controller.

Sleep control

When the air conditioner is in COOL or DRY mode, after Sleep mode has been set properly, the preset Tset will be increased by 1°C after the sleep program has run for 1 hour, and Tset will be increased by another 1°C after 2 hours. Tset has been increased by 2°C total in two hours. Then the unit will run at this set temperature and at the set speed.

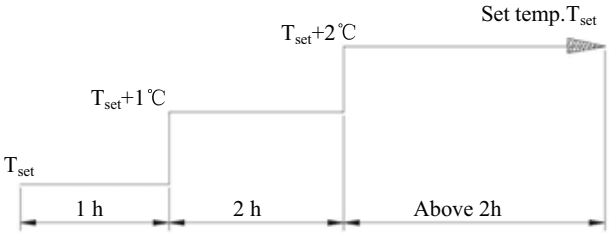

When the air conditioner is in HEAT mode, after Sleep mode has been set properly, the preset Tset will be decreased by 1°C after the sleep program has run for 1 hour, and Tset will be decreased by another 1°C after 2 hours. Tset has been increased by 2°C totally in two hours. Then the unit will run at this set temperature and at the set speed.

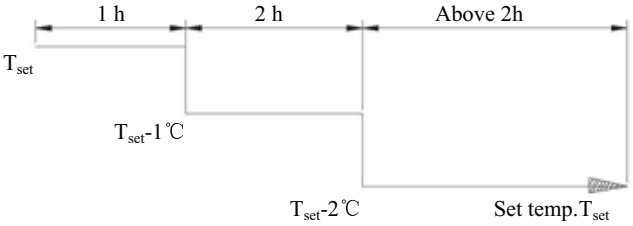

In AUTO or FAN mode, the setting temp. will not change.

Indoor fan control

Use the remote controller to set the indoor fan running at HIGH, MED or LOW speed. At this time the fan will run at high, medium or low speed. It can also be set to AUTO and the indoor fan will select fan speed(HIGH, MED or LOW) automatically according to ambient temperature.

There are at least 3 mins and 30s delay for fan speed shift.

Power supply for outdoor unit

The power supply for outdoor unit is turned on in AUTO, COOL, HEAT and DRY mode under turn-on state.

The power supply for outdoor unit will delay 3 minutes to turn off under turn-off state or in the FAN mode under turn-on state.

Swing control

Use the SWING button of the wireless remote control to control SWING On and Off. Swing will only act when indoor fan is running. After power on, the swing motor turns back to 0 position and closes the air outlet vent; if it does not preset swing, after the unit is turned on, it will turn to the max. air outlet D1 position; then turn back to L position under COOL mode.Under HEAT mode, the guide louver stays at D1; when in swinging state, it will swing between L1 and D1 position. When the unit is turned off, it will turn back to 0 position.

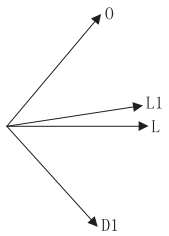

Buzzer control

When the unit is power on or receives remote control signal or the auto key be pressed, the buzzer will give out a beep.

Power-off memory function

Contents of memory: Mode; Swing; Set fan speed, Set temperature, Timing etc.

Under turn-on state, when power off and power on, the power supply for outdoor unit will be turn on after 3 mins.

Under turn-off state, when power off and power on, the power supply for outdoor unit will be turn on immediately.

Delay Protection of Compressor

Under COOL; DRY; HEAT mode, before each time the compressor starts, there will be 3 mins delay.

Common protection function in each mode

Overload protection

Ttube: at cooling,it detects the temp. of outdoor heat exchanger,at heating,it detects the temp. of indoor heat exchanger.

When Ttube is detected high, the compressor will run in limited frequency. When Ttube goes on rising over the stated value, the compressor will stop; under AUTO HEAT or HEAT mode, indoor fan will blow 60s at low fan speed and then stop; under other mode, the indoor fan will run at set speed.

Compressor discharge temperature protection

When discharge temperature is too high to over the stated value, the compressor will stop, and When discharge temp. resume normal and the compressor has stopped for 3 minutes, the unit will resume its original operating status.

Communication malfunction

When not receiving correct signal for 3 minutes, the unit has communication malfunction and the outdoor unit stops, it is the same as normal stop when meeting the set temp.

Module protection

When module is in protection, the compressor will stop, after the compressor has stopped for 3 minutes, it will resume to running. During module protection period, the indoor unit displays malfunction and the whole unit stops.

Disassembly Procedures

Procedure

Indoor Units

⚠ **Warning** **Be sure to wait 10 minutes or more after turning off all power supplies before disassembling work.**

Image shown here is indicative only. Actual product you receive may differ.

1. Remove front panel
Open the front panel and slightly pull it to remove it.

2. Remove guide louver
Push out the shaft sleeve and slightly bend the guide louver to remove it.

3. Remove electirc box cover
Unscrew the screw fixing the electric box cover to remove it.

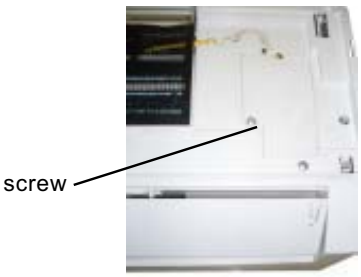

4. Remove front case
Unscrew the 6 tapping screws fixng the front panel and turn the front case backward to remove it.

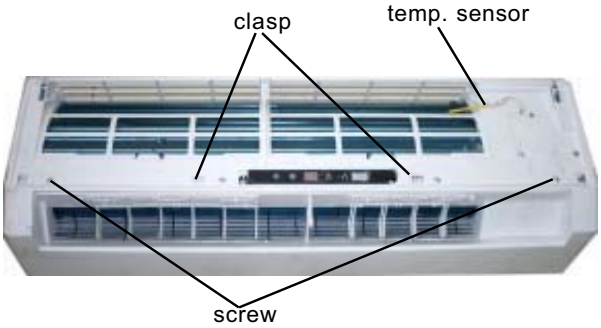

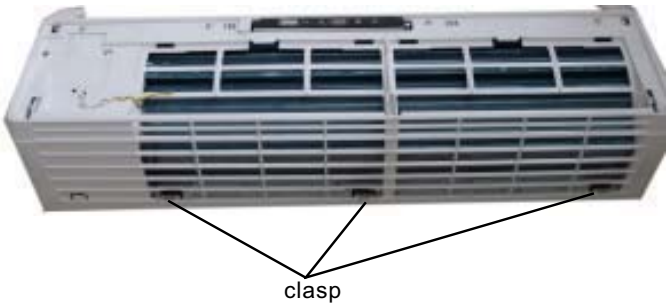

5. Remove electric box
Unscrew the 2 screws fixing the electric box
Pull out the wiring terminal of motor and then unscrew the 3 screws fixing electric box.Lift the electric box to remove it.

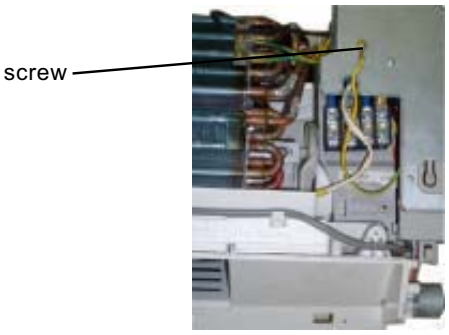

6. Remove evaporator
Unscrew the screws on the rear pipe cardplate and then remove the cardplate.

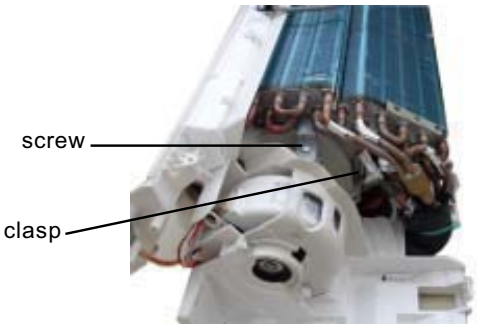

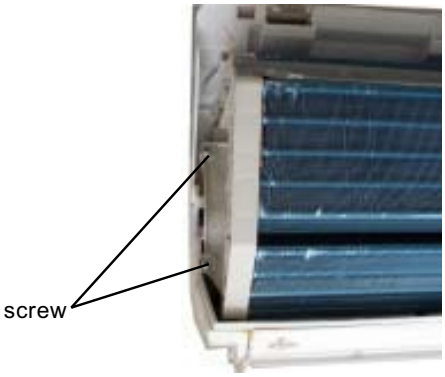

7. Remove motor and cross flow fan
Unscrew the screws fixing the motor press plate of motor and then the screws connecting the motor and cross flow fan to separate and remove them.

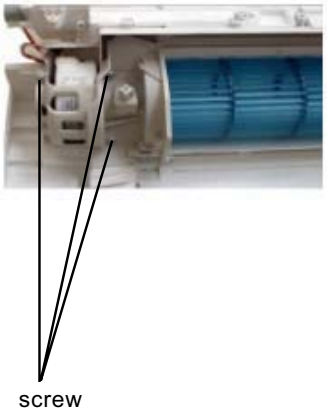

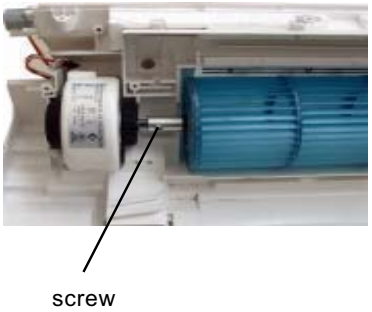

Removal Procedure of Outdoor Unit

1. Remove top cover and the Cable Cross Plate sub-assy Unscrew the screw on the handle and pull the Cable Cross Plate sub-assy forcibly downwards to remove it. Unscrew the 3 screws fixing the top cover to remove it.

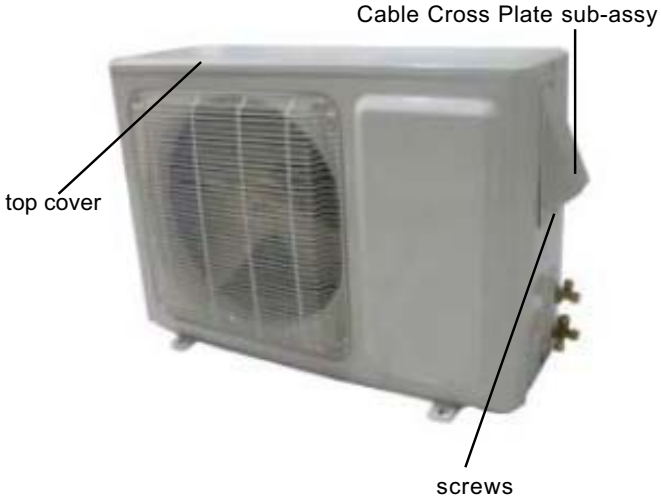

2. Remove cabinet
Unscrew the 4 screws fixing the cabinet to remove it.

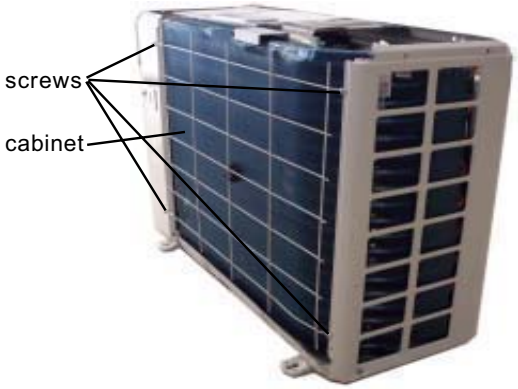

3. Remove front panel
Unscrew the 5 screws fixing the front panel and pull out the front panel to remove it.

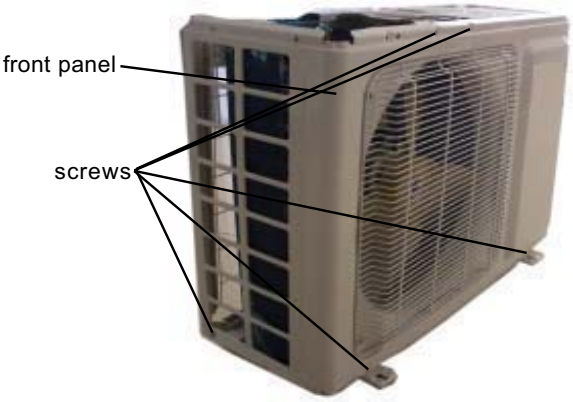

4. Remove electric box cover
Unscrew the 2 screws fixing the electiric box. Pull theelectric box upwards and unplug the plug-in line to remove the electric box.

5. Remove axial flow fan
Unscrew the nut and remove the washer fixing the axial flow fan and then pull it out.

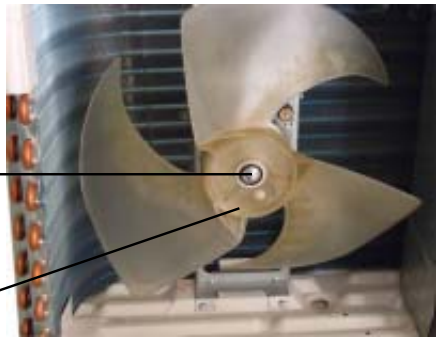

6.Remove 4-way valve
Wrap the 4-way valve with wet cloth and unsolder the 4 weld spots of the 4-way valve to remove it.

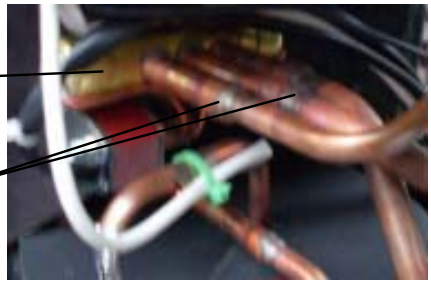

7. Remove electronic expannsion valve
Unsolder the weld spots of eletronic expansion valve connecting with other pipelines to remove it.

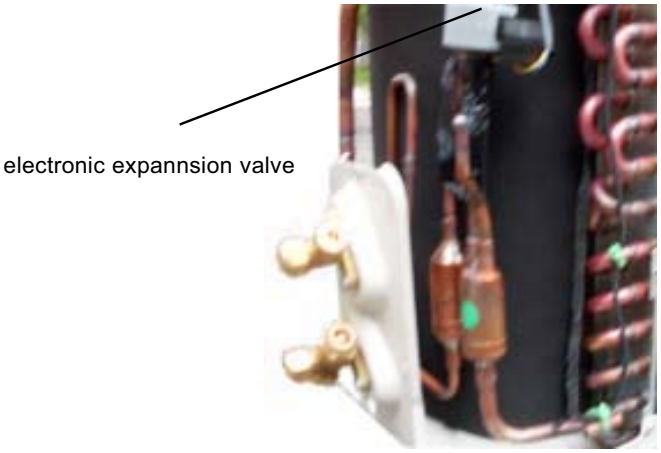

8. Remove gas valve and liquid valve
Unscrew the 2 screws fixing the gas valve and unsolder the weld spots of gas valve and suction pipe to remove the gas valve.
Unscrew the 2 screws fixing the liquid valve and unsolder the weld spots of liquid valve and suction pipe to remove the liquid valve.

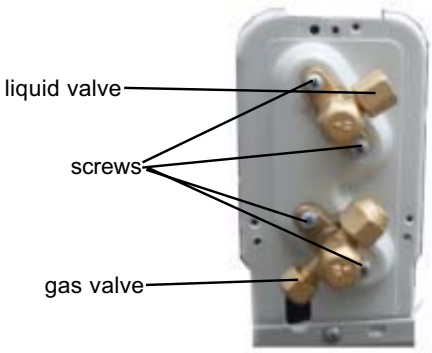

9 . Remove compressor
Unsolder the 2 weld spots of the compressor and unscrew the 3 feet nuts and remove the washeres fixing the compressor to remove it.

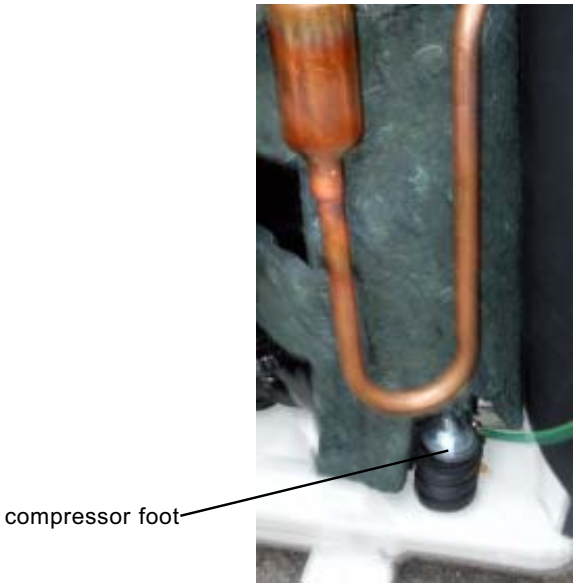

Troubleshooting

⚠WARNING

Hazardous Service Procedures!

The maintenance and troubleshooting procedures recommended in this section of the manual could result in exposure to electrical, mechanical or other potential safety hazards. Always refer to the safety warnings provided throughout this manual concerning these procedures. Unless specified otherwise, disconnect all electrical power including remote disconnect and discharge all energy storing devices such as capacitors before servicing. Follow proper lockout/tagout procedures to ensure the power can not be inadvertently energized. When necessary to work with live electrical components, have a qualified licensed electrician or other individual who has been trained in handling live electrical components perform these tasks. Failure to follow all of the recommended safety warnings provided, could result in death or serious injury.

General Section

⚠WARNING

Hazardous Voltage!

Disconnect all electric power, including remote disconnects before servicing. Follow proper lockout/tagout procedures to ensure the power can not be inadvertently energized. Failure to disconnect power before servicing could result in death or serious injury.

Figure 1. Air conditioner cannot start up

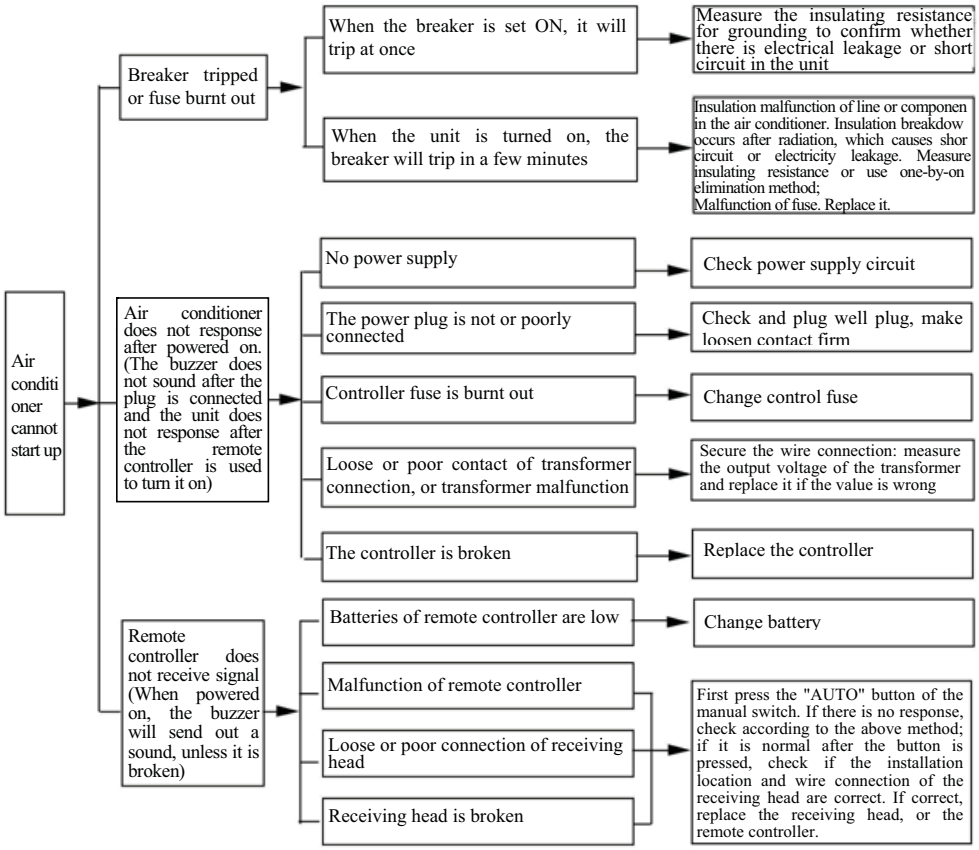

Figure 2. Troubleshooting chart

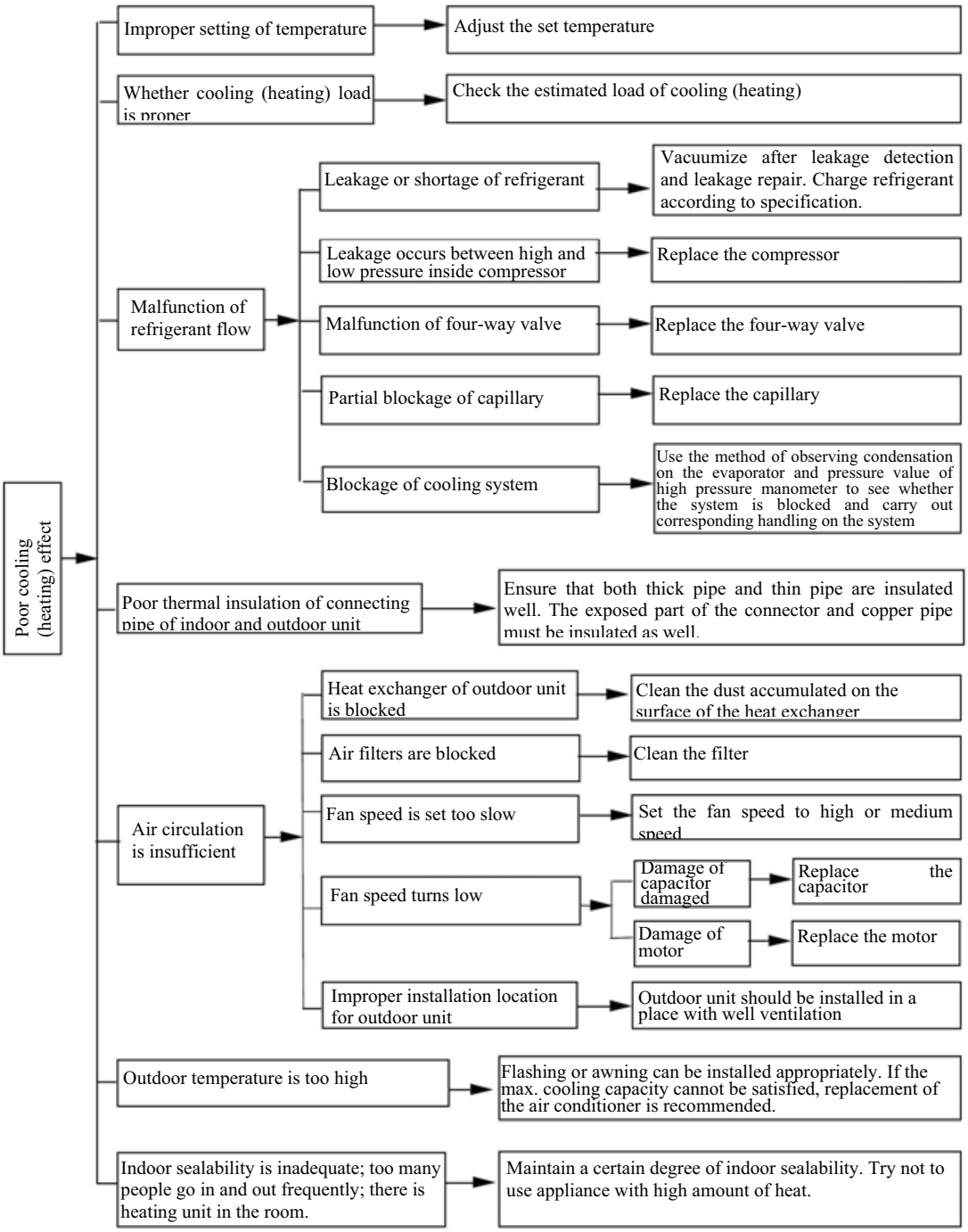

Figure 3. Troubleshooting chart

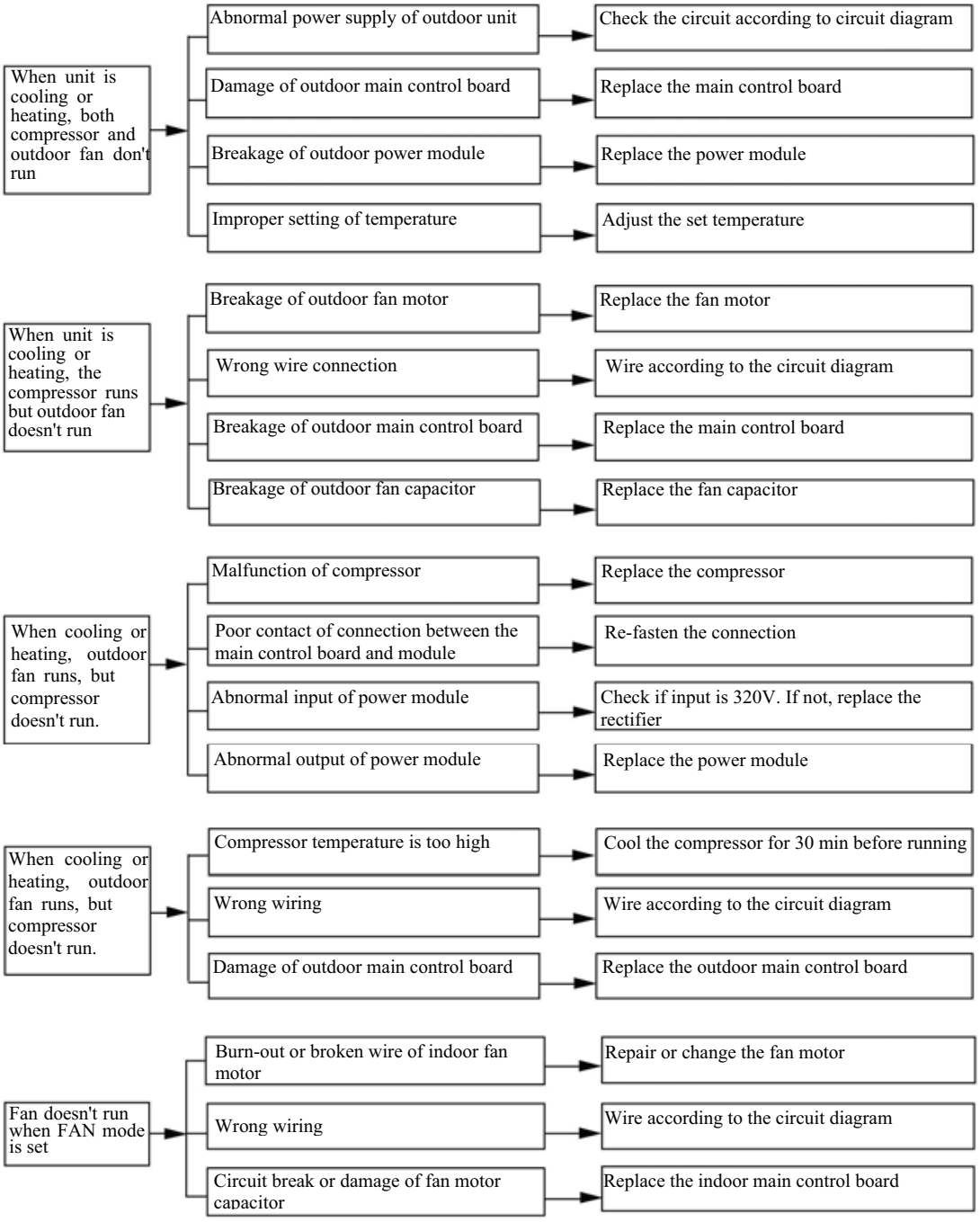

Figure 4. Troubleshooting chart

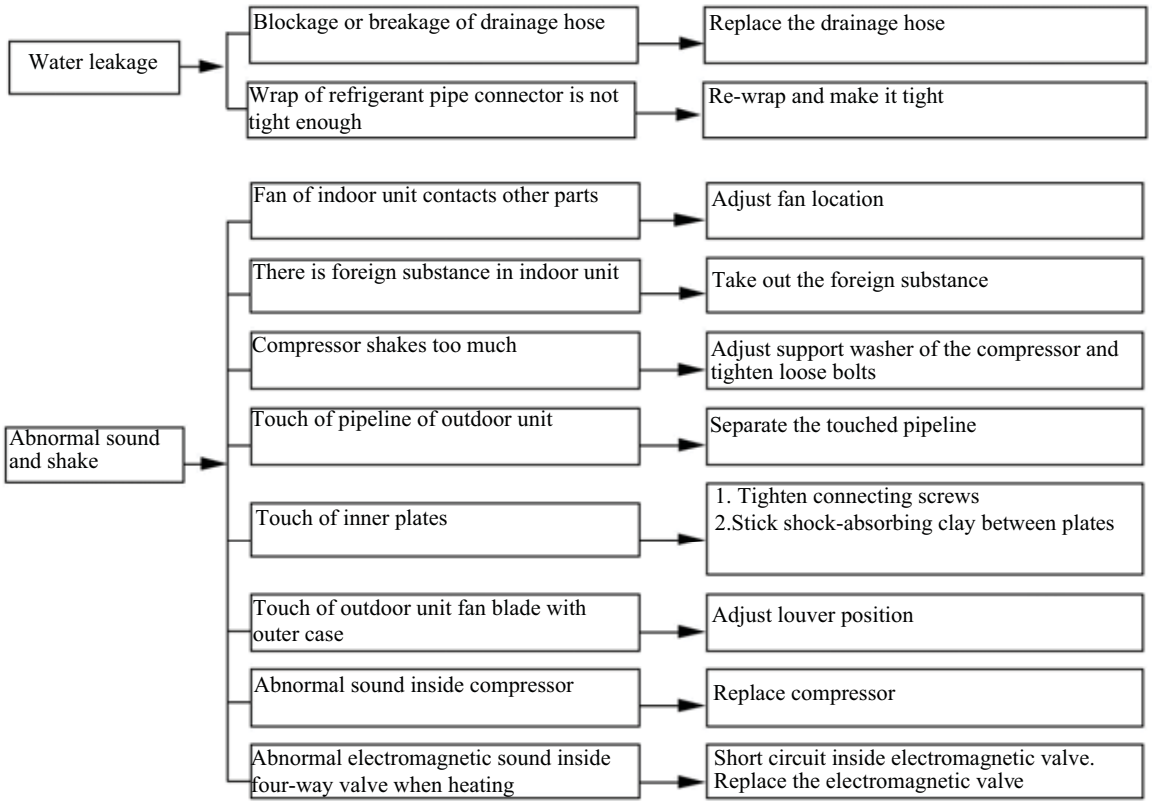

Note: *When replacing power module and rectifier, be sure to spread the radiating paste evenly.*

Figure 5. Compressor is too hot

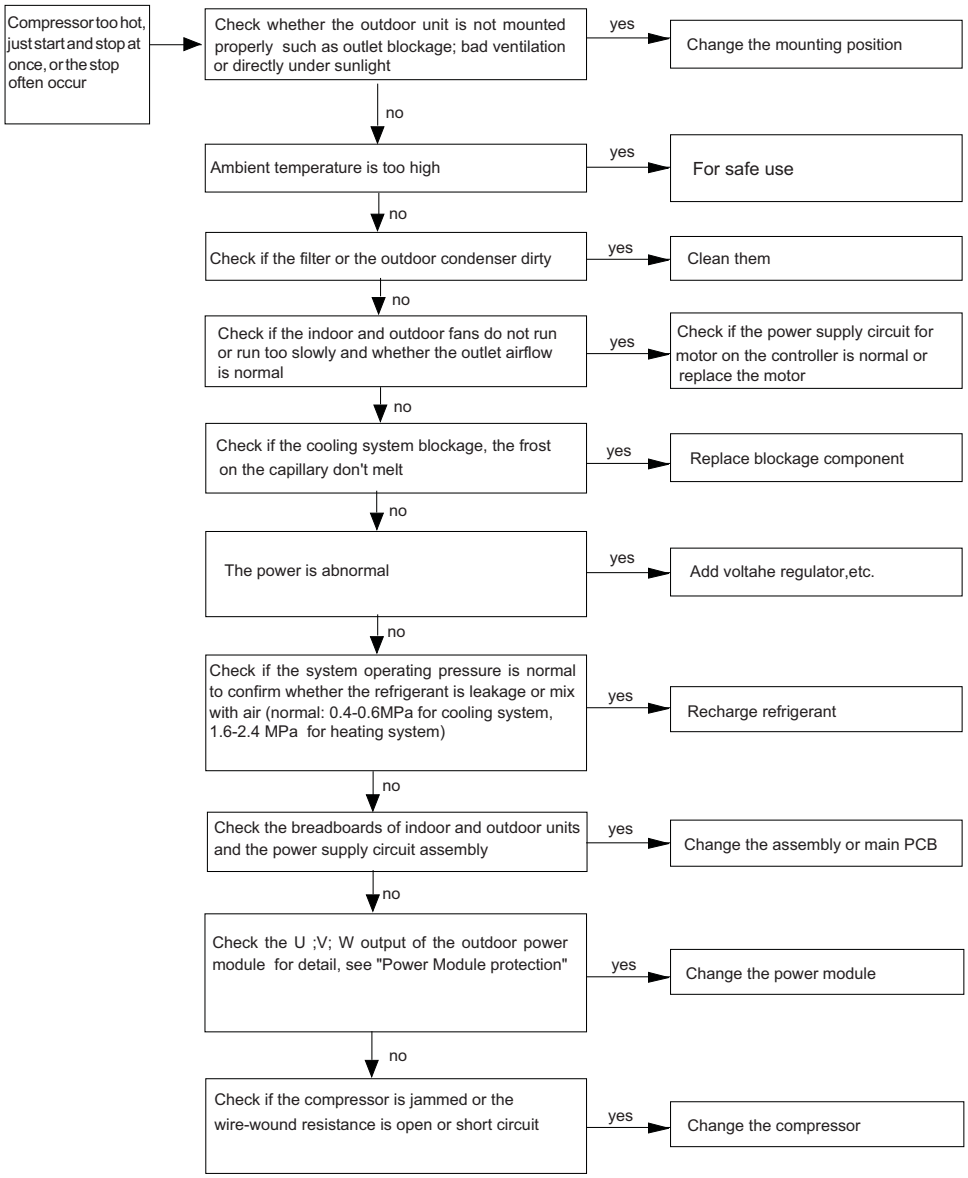

Malfunction Display Section

When malfunction or protection occurs in the air conditioner, corresponding code will be displayed on the screen of the indoor unit and the indicator of outdoor unit will blink accordingly as well. When protection or malfunction is eliminated, display will be back to normal.

Analysis or handling of some of the malfunction displays:

1. System high pressure protection (E1):

   Handling method: check the system pressure, or replace the PCB.
2. Anti-freezing protection (E2):

   The unit will recover later, no correction is needed.
3. Compressor discharge protection (E4):

   Possible reasons: shortage of refrigerant; blockage of air filter; poor ventilation or air flow short pass for condenser; the system has non-condensing gas (such as air, water etc.); blockage of capillary assay (including filter); leakage inside four-way valve causes incorrect operation; malfunction of compressor; malfunction of protection relay; malfunction of discharge sensor; outdoor temperature too high.

   Handling method: refer to the malfunction analysis in the above section.
4. Low voltage over-current protection (E5):
   Possible reason: Sudden drop of supply voltage.
5. Communication malfunction (E6):
   Handling method: Check if communication signal cable is connected reliably.
6. Sensor open or short circuit (F1, F2, F3, F4, F5):
   Handling method: Check whether sensor is normal, connected with the corresponding position on the controller and if damage of lead wire is found
7. Compressor overload protection (H3):
   Possible reasons: insufficient or too much refrigerant; blockage of capillary and increase of suction temp.; improper running of compressor, burning in or stuck of bearing, damage of discharge valve; malfunction of protector.
   Handling method: adjust refrigerant amount; replace the capillary; replace the compressor; use universal meter to check if the contactor of compressor is fine when it is not overheated, if not replace the protector.
8. System malfunction (H4):
   i.e. overload protection. When tube temperature (Check the temperature of outdoor heat exchanger when cooling and check the temperature of indoor heat exchanger when heating) is too high, protection will be activated.
   Possible reasons: Outdoor temperature is too high when cooling; insufficient outdoor air circulation; refrigerant flow malfunction. Please refer to the malfunction analysis in the previous section for handling method.
9. No feedback from indoor fan motor
   Possible reasons: the connection of indoor fan moor to the main board, or the motor, or PCB is broken.
   Handling method: reinsert the motor's wire to PCB, or replace the motor, or replace PCB.

Figure 8. Troubleshooting Module Protection (H5)

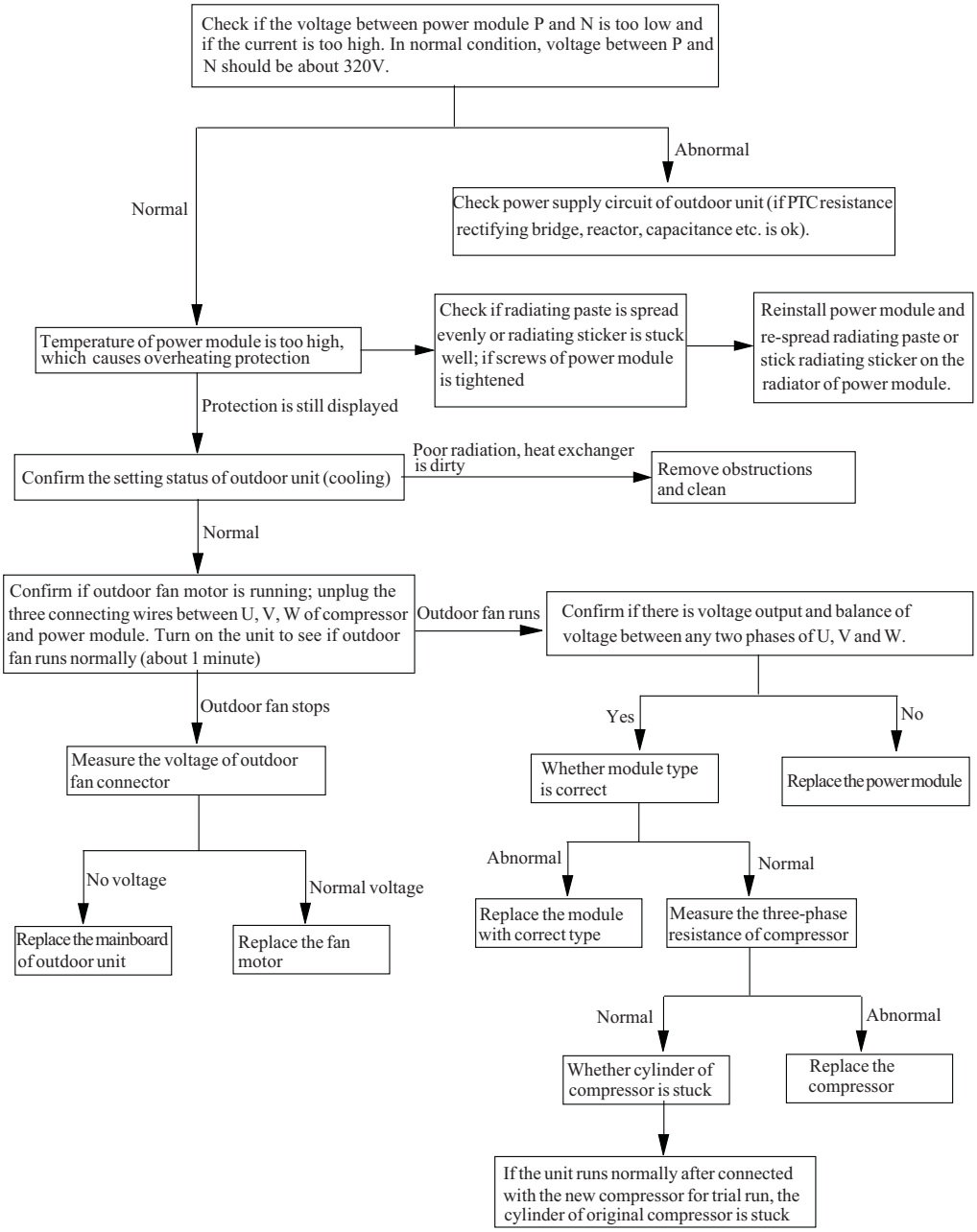

Literature Order Number

Date

Supersedes New

www.trane.com

For more information, contact your local Trane office or e-mail us at comfort@trane.com

Trane has a policy of continuous product and product data improvement and reserves the right to change design and specifications without notice.